JYOTI

SINCE - 1987

Your Total Sheet Metal Systems Partner

Business Presentation

Date : 05-Sept-2023

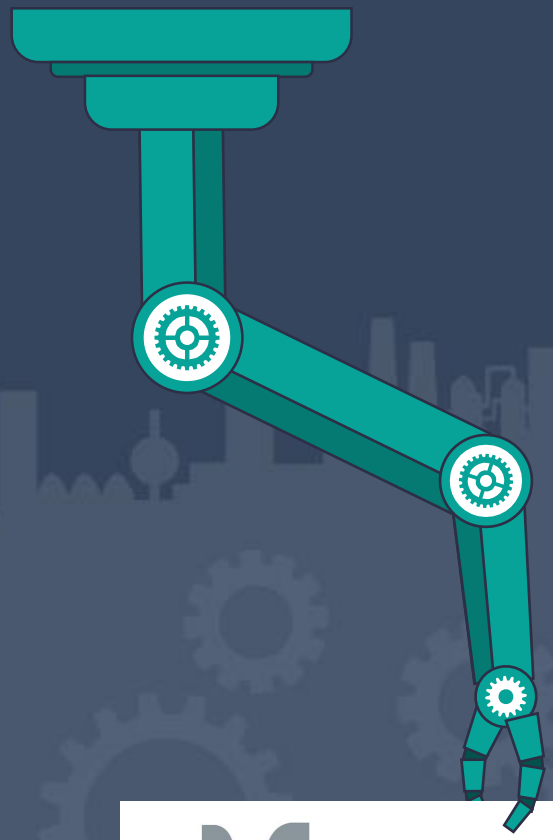

JYOTI
SINCE - 1987
Your Total Sheet Metal Systems Partner

Agenda

01 General Overview

Organization structure & a brief history of how everything was started. Plant & customer details

02 Engineering Services

Turnkey Project , Project Management , Assembly Solutions etc.

03 Design Capabilities

Design process which we follow to ensure high quality standards

04 Dies & Toolings

Tool room capabilities to manufacture Dies , Jigs , Fixtures , Welding units & automations

05 Stamping & Fabraction Plants

Making & delivering high Quality Stamping Child parts, welding assemblies etc.

06 Tool Making@ Jyoti , Quality & CSR

Case Study for Design & Manufacturing

General Overview

Organization structure & a brief history of how everything was started.

Plant & customer details

JYOTI
SINCE - 1987
Your Total Sheet Metal Systems Partner

Corporate Structure

Jyoti SolutionsWorks Pvt Ltd., is an existing Sheet Metal stamping & Welded Sub- Assemblies manufacturing company serving various OEM's like Tata Motors, TVSM, Royal Enfield, Daimler, from their Pune & Chennai facilities.

Unit I - Head Office (Pune , Bhosari MIDC)

Corporate Office
Design/ Engineering Center
Medium Tooling's Shop
25,000 Sq. Ft. Area

Unit II (Pune , Moshi MIDC)

Heavy Tooling's Shop
Pattern Shop
Prototyping Center
150,000 Sq. ft.

Unit V - (Pune , Talegaon MIDC)

Heavy Shearing , Plasma
Cutting & Sheet Metal supply
5,25,000 Sq Ft. Area

Unit VI (Akurdi , Pune)

Technology Centre

Unit IV (Chennai, SPICOT Sriperumbudur)

Stampings Line.
Welding Line.
200,000 Sq. Ft Area

Unit III (Pune , Markal MIDC)

Heavy Stampings Line.
Welding Line.
150,000 Sq. ft.

JYOTI
SINCE - 1987
Your Total Sheet Metal Systems Partner

Our Founder & Chairman

Mr T. Karuppiah

Jyoti Group is emerging & aiming towards becoming a complete one-stop-shop solution for sheet metal tooling solutions. . Jyoti Group believes in quality management system to ensure continual improvement of products, processes & resources through the PDCA cycle.

At Jyoti, we believes in core strengths such as design, manufacturing & delivering services backed with experts and a skilled workforce inline with Quality delivery of solutions as per customers requirement.

JYOTI
SINCE - 1987
Your Total Sheet Metal Systems Partner

Management Team

Nithyanand Thevar (MD)

- Qualification : BE (Mech) , DME
- Exp : 30 Yrs +
- Sheet Metal Solutions (Tool Development , Stamping , Welding)

Vijaya Bhaskar

- Qualification : BE (Mech) , MS – Mgf Mgmt(BITS Pilani) , MBA (SP-Jain)
- Exp : 30 Yrs +
- Technical Director
- Jyoti , Godrej , Kinetic

Yogesh Mishra

- Qualification : BE(Mech), **MBA (IIMK)**
- Exp : 23 Yrs +
- Marketing , IT
- MTS , IBM , Tech Mahindra

JYOTI
SINCE - 1987
Your Total Sheet Metal Systems Partner

A Brief History

1987 — **Jyoti Toolings Started**
In Partnership

1991 — **Started Own**
Got our first CNC

1996 — **Registered**
With TATA Motors

2000 — **Established**
Second Plant (Pune) for Medium Die Shop

2005 — **Started**
Design Center

2006 — **Established**
Third Plant (Pune) for Heavy Die Shop

2007 — **B-Class Dies**
Tata Motors L-R Dies for Tata motors.
ISO Certified

2009 — **Established**
Forth Plant (Pune) for Stamping part supply

2009 — **Registered**
Daimler for Tooling's & Part supply

2010 — **Established**
Fifth Plant (Chennai) for Stamping part supply

2012 — **Developed**
Skin panel Fuel Tank dies for Bajaj & RE

2016 — **Developed**
Scooter Skin panel dies for TVS & Part supply

2018 — **Integration**
SAP HANA for all plants

2020 — **Developed**
TVSM
3W & 2W Complete skin pannel
VW
2.0 Program

2021 — **Established**
Heavy Fabraction , CTL/CTS, Plasma , PressBreak , Rolling

JYOTI
SINCE - 1987
Your Total Sheet Metal Systems Partner

Organization Management

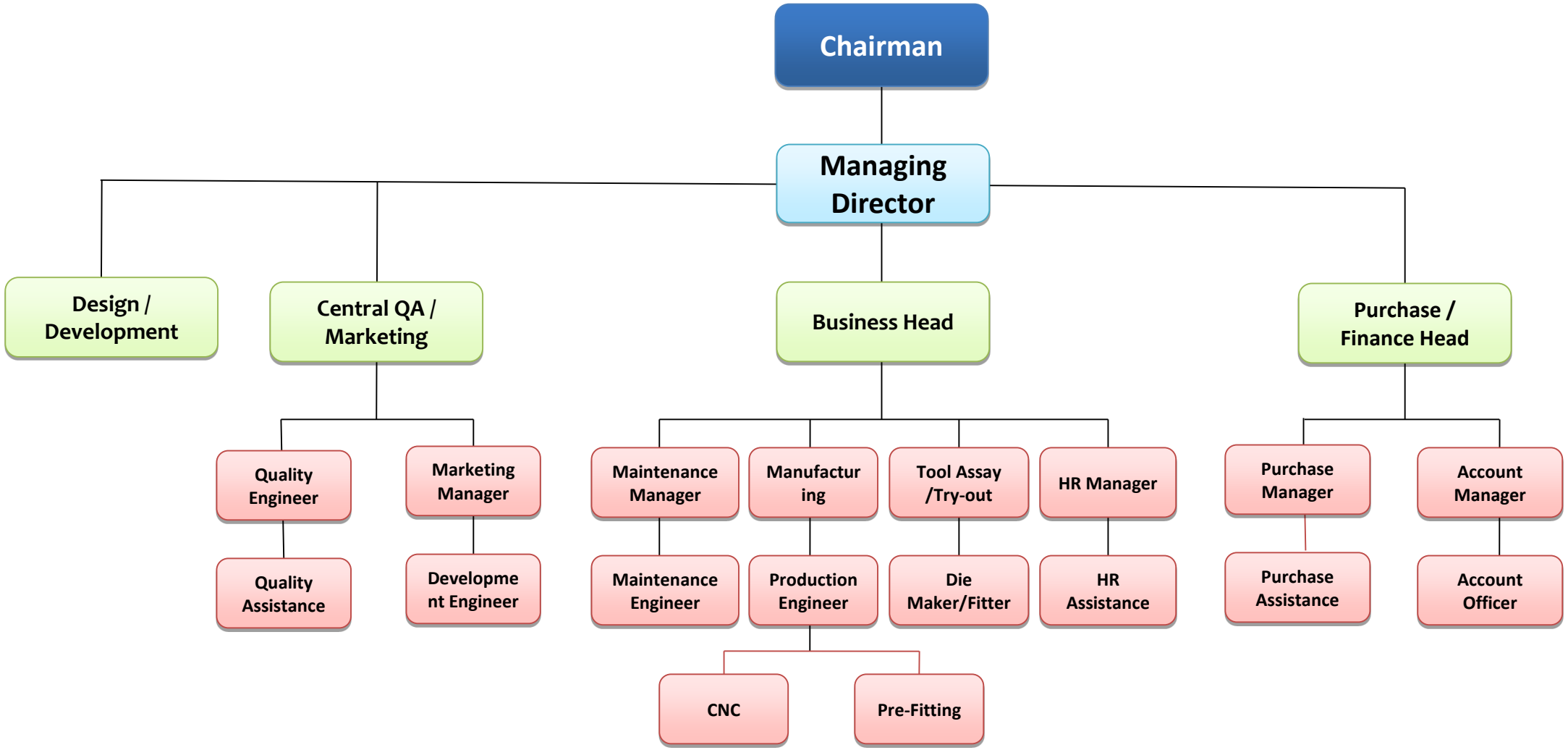

Some Clientele

Maruti Suzuki Ltd.

Ashok Leyland Ltd.

Tata Motors Ltd.

Mahindra & Mahindra Ltd.

AAM Ltd..

Renault Nissan

Magna Cosma International Ltd

Daimler India Commercial Vehicle

MAN Truck India Ltd

Suzuki Motorcycle

Royal Enfield Ltd.

Bajaj Auto Ltd.

TVS Motors Ltd.

Piaggio Vehicles Pvt. Ltd.

Toyota

EV Customers

ALTI Green

Kabira Mobility

BGAUSS

AMPERE

TICM – Montra Electric

Euler Motors

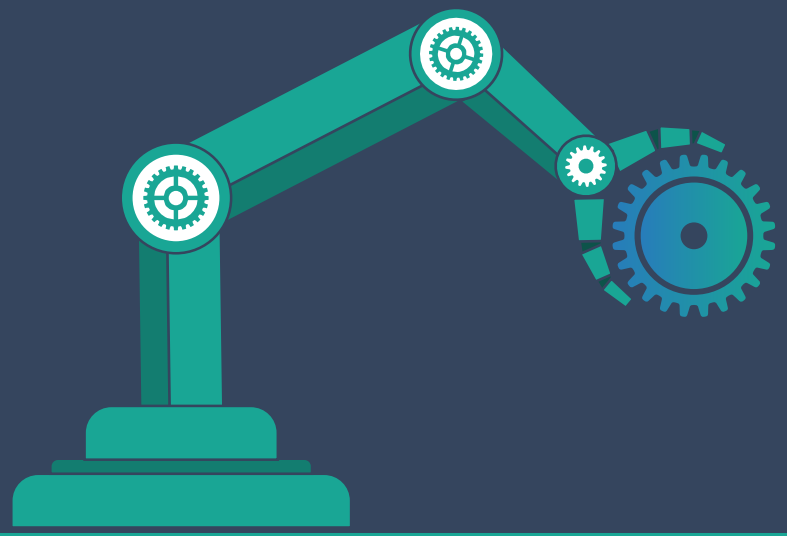

Engineering Services

Turnkey Project , Project Management , Assembly solutions etc.

JYOTI
SINCE - 1987
Your Total Sheet Metal Systems Partner

Capabilities

Transform Your Projects and Operations

Total Solution Partner

The engineering services is indispensable for the support of industries in defence, automobile, railways, infrastructure etc. With the changes in nature of markets where industrial activity is growing vigorously, companies are forced to devise new strategies to counter low-cost competition and cyclic changes in demand.

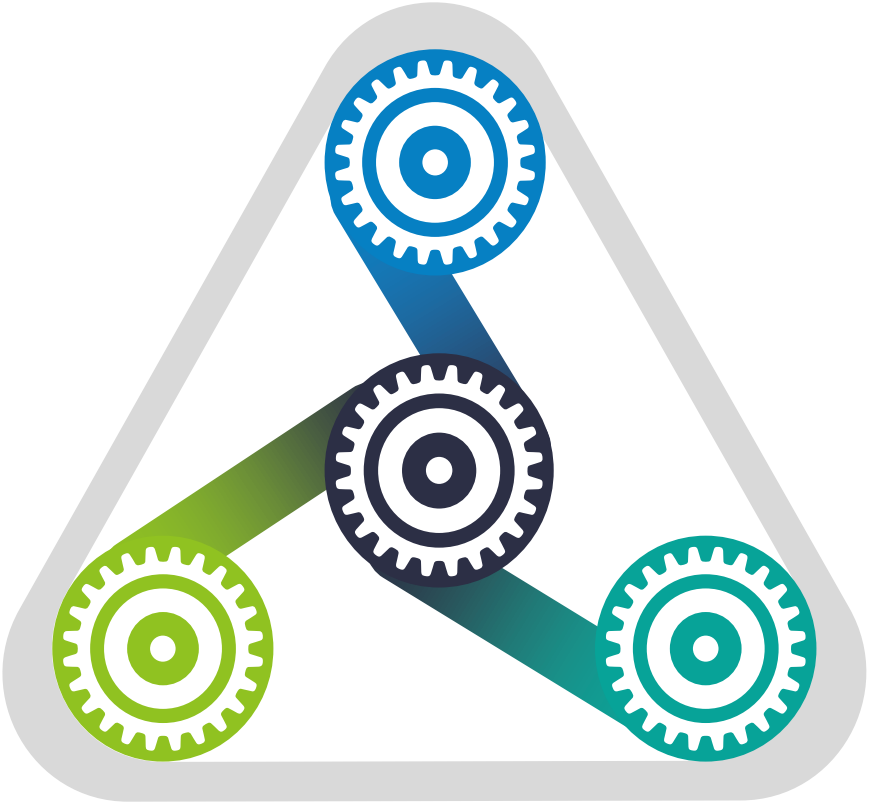

Turnkey Solution

Jyoti's engineering-based program combines industry expertise, consulting services, our comprehensive automation technologies portfolio and Industrial IoT solutions. Rignt from support from Sheet metal Tooling Design to Delivering Welding or Painted output.

Project Management

Jyoti tooling's engagements include Business Process management, Project management, Performance management , Business transformation among others. We create client engagements specific to the needs of each client which has helped us to consistently deliver excellent results.

Assembly Solutions

Development of Products , Commissioning of toolings with Machine , Welding Fixtures solutions . fulfilling Powder Coating requirements.

Consulting

New product development , Packaging design , Reverse engineering , Simulations for new products , Development of Import substitute products, Design Services

JYOTI
SINCE - 1987
Your Total Sheet Metal Systems Partner

Sample Turnkey Solutions

Assembly Welding Solutions

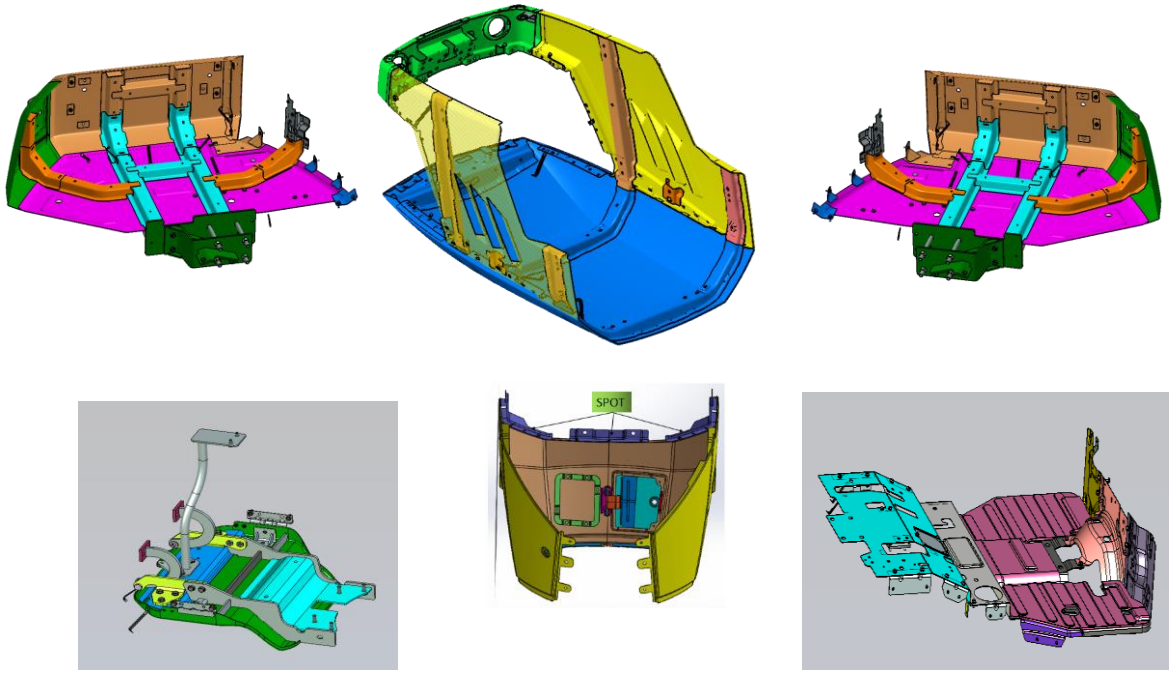

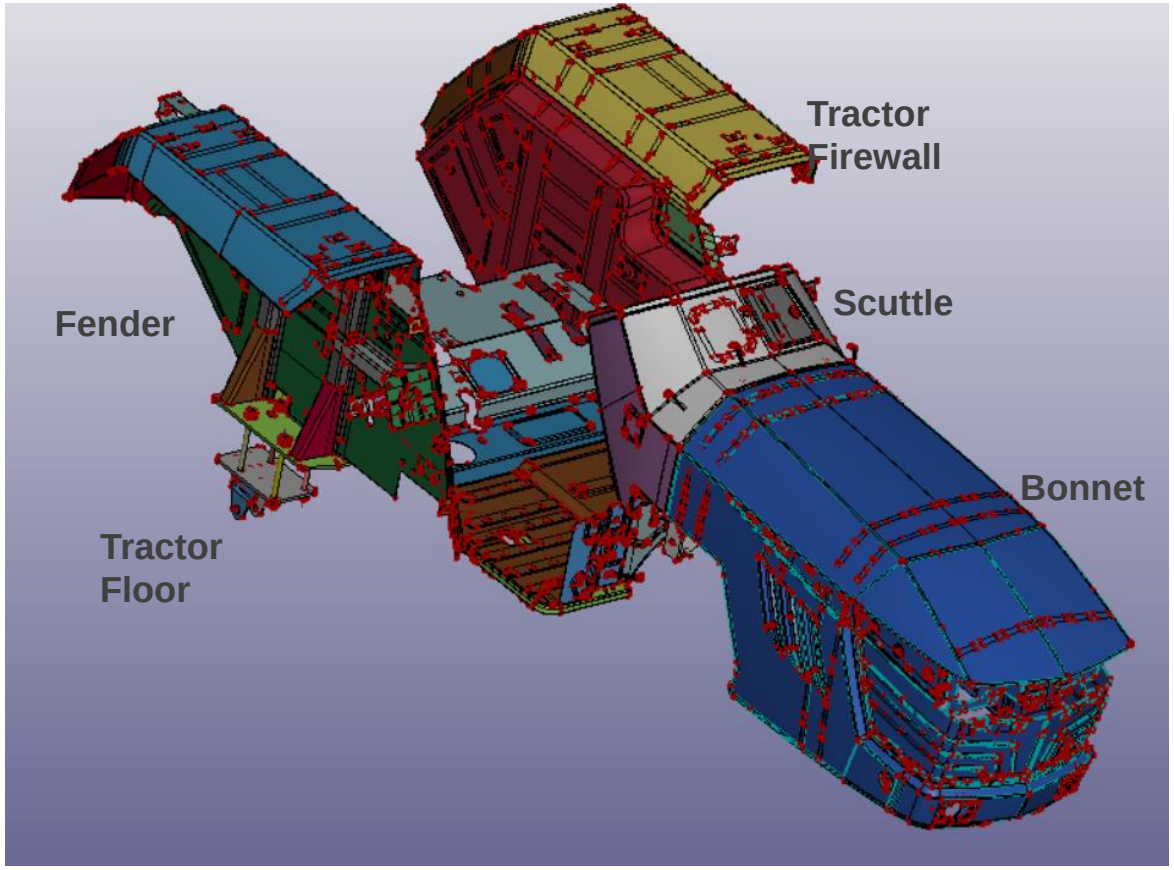

167 Parts – 355 Dies
50 Welding Fixtures , 205 Weld Nut , 165 Bolts ,
36 Wire Harness Clamps , 25 Machined Parts

JYOTI
SINCE - 1987
Your Total Sheet Metal Systems Partner

Sample Turnkey Solutions

JYOTI
SINCE - 1987
Your Total Sheet Metal Systems Partner

End to End Solution - EV Scooter

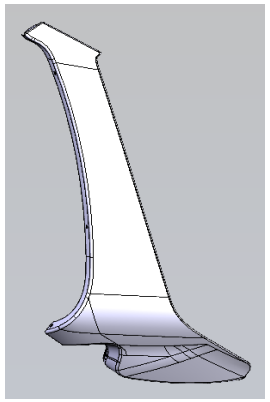

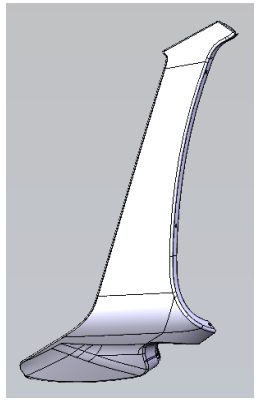

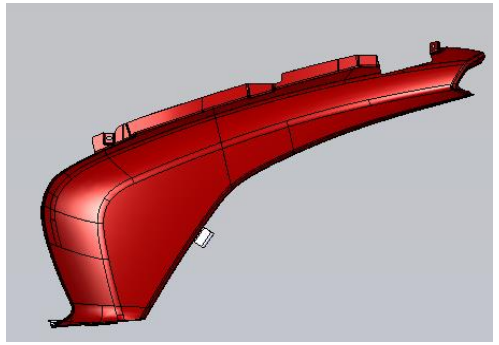

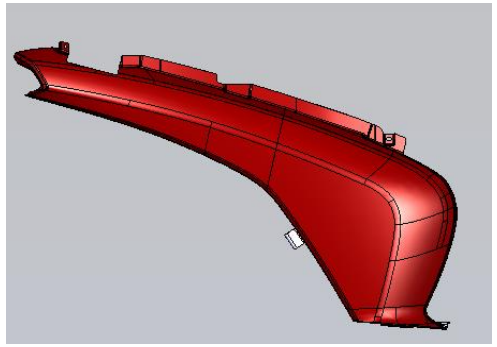

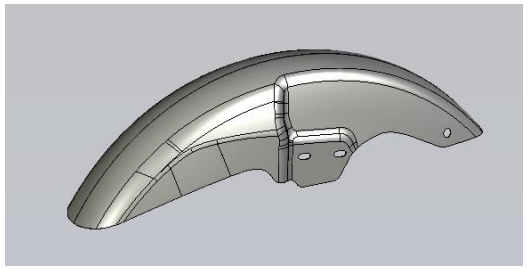

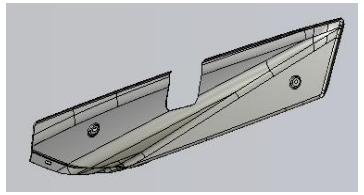

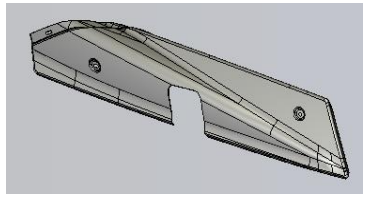

All Metal Parts

Simulation & Deisgn Feasibility

Tool Development

Stamping , Welding , Development of Pallets

CED Coating, Painting & Logistics handling

JYOTI
SINCE - 1987
Your Total Sheet Metal Systems Partner

End to End Solution – 3-W EV Solution

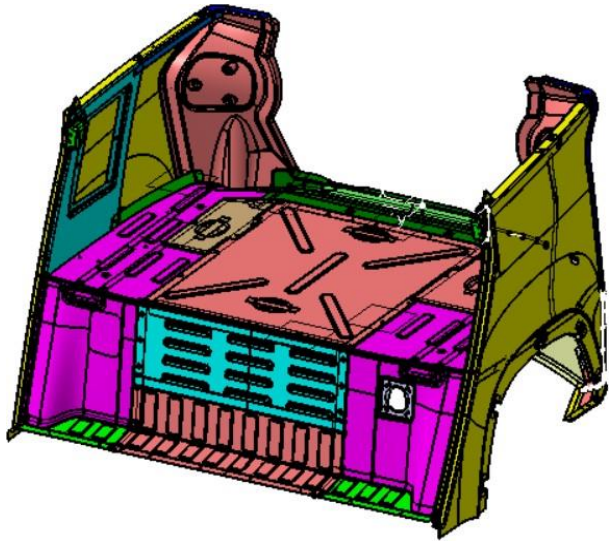

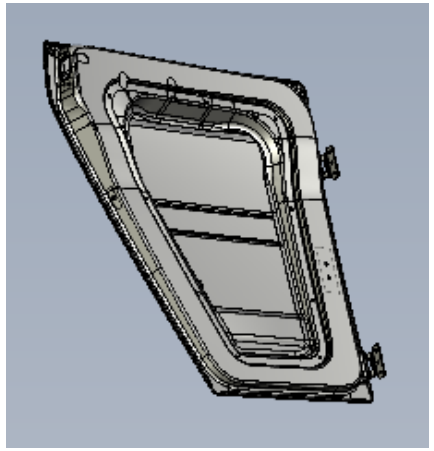

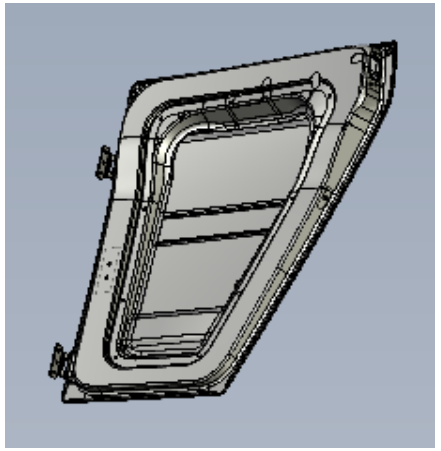

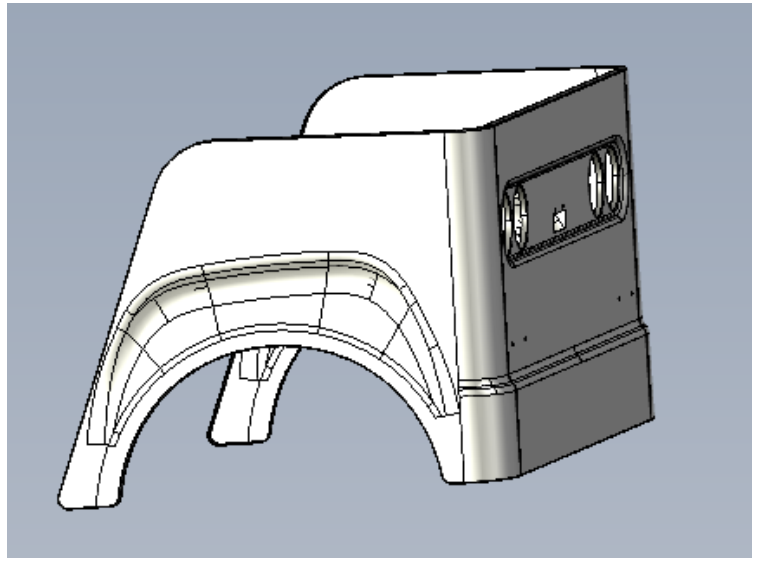

Simulation & Deisgn Feasibility

Tool Development

Stamping , Welding , Development of Pallets

CED Coating, Painting & Logistics handling

JYOTI
SINCE - 1987
Your Total Sheet Metal Systems Partner

Sample EV Solutions

Complete Welding Solutions for Frames

2-W Chassis Solutions with Robotic Welding line

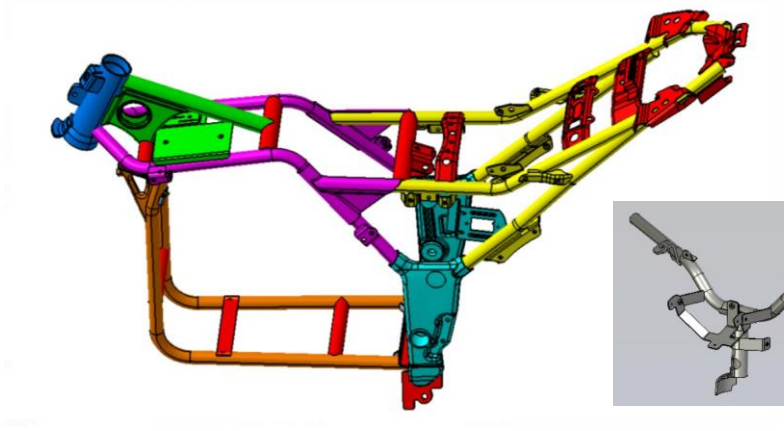

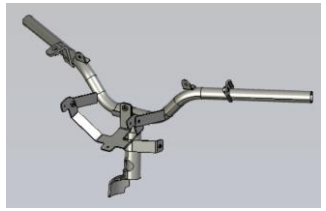

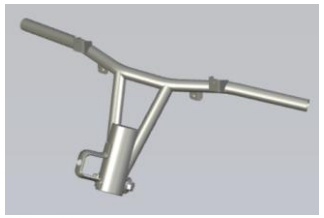

2-W Swing Arm & Handle Assembly

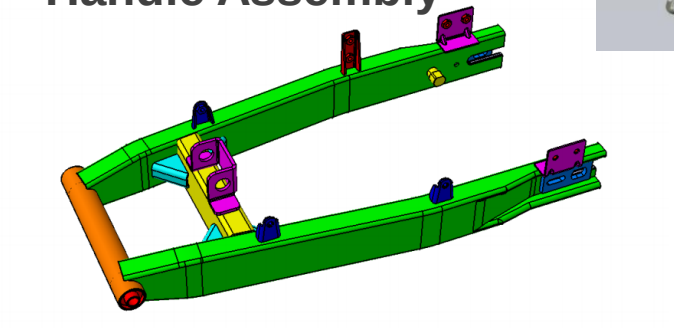

3-W Frame Chasis Solutions

JYOTI
SINCE - 1987
Your Total Sheet Metal Systems Partner

Sample EV Solutions

Complete Welding Solutions for Frames

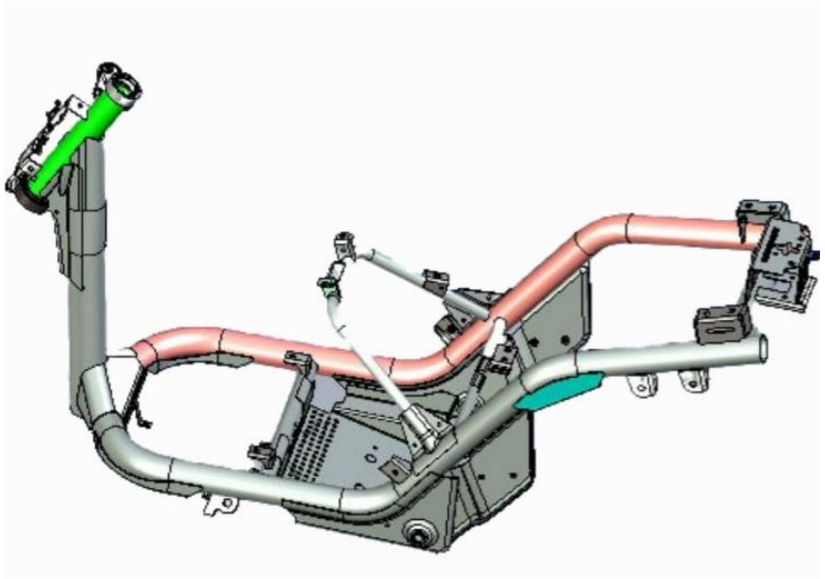

Development Chassis

Chassis & Swing Arm - Successfully delivered via Manual method

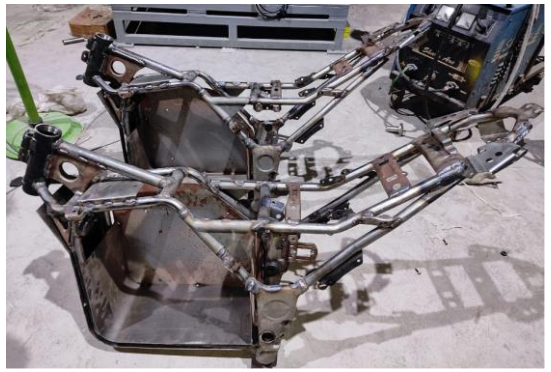

Chasis- Robotic Line

For Precise part production

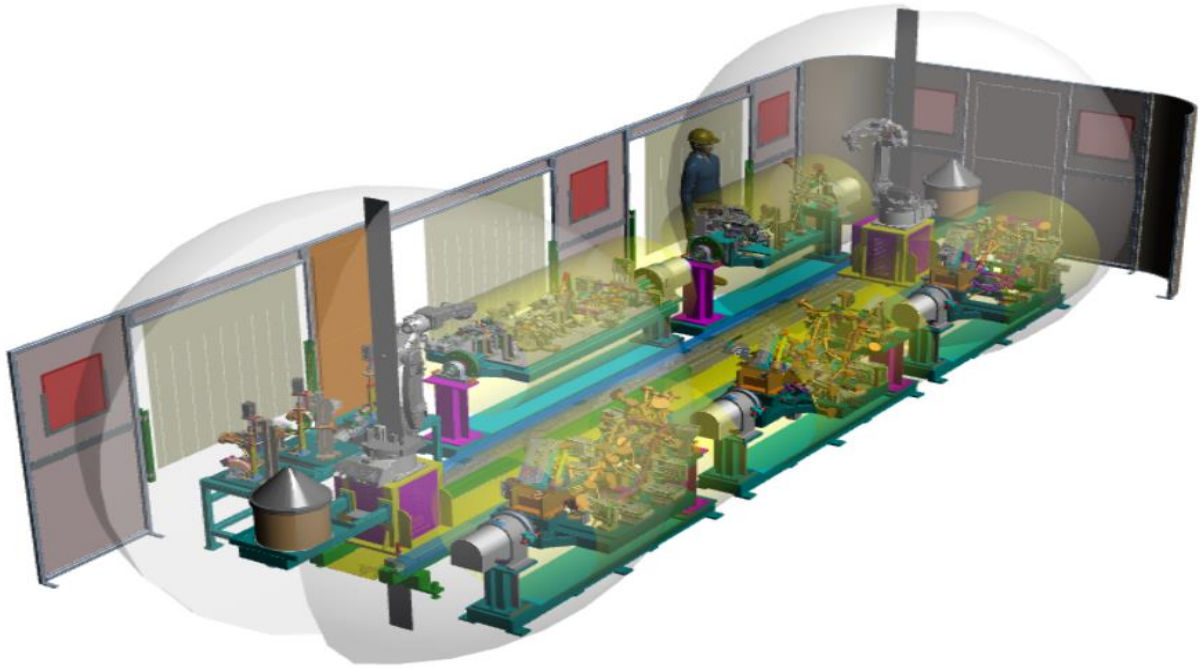

Chasis- Robotic Line

For Precise part production

Chasis- Robotic Line

For Precise part production

Sample EV Solutions

Transportation Delivery Solutions

Sample EV Solutions

Transportation Delivery Solutions

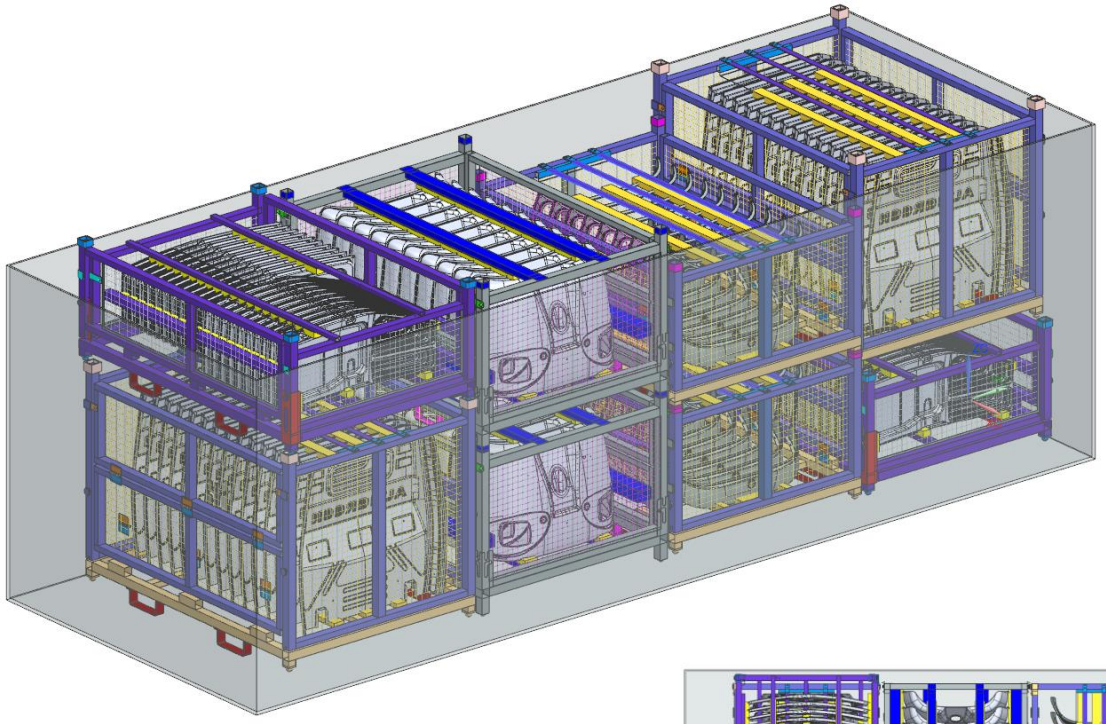

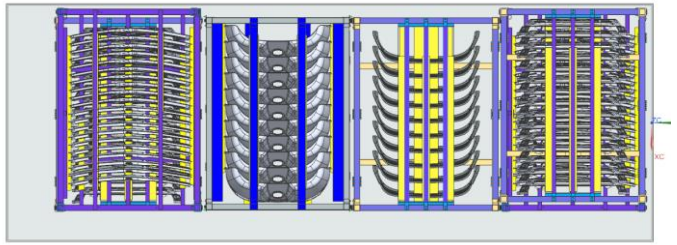

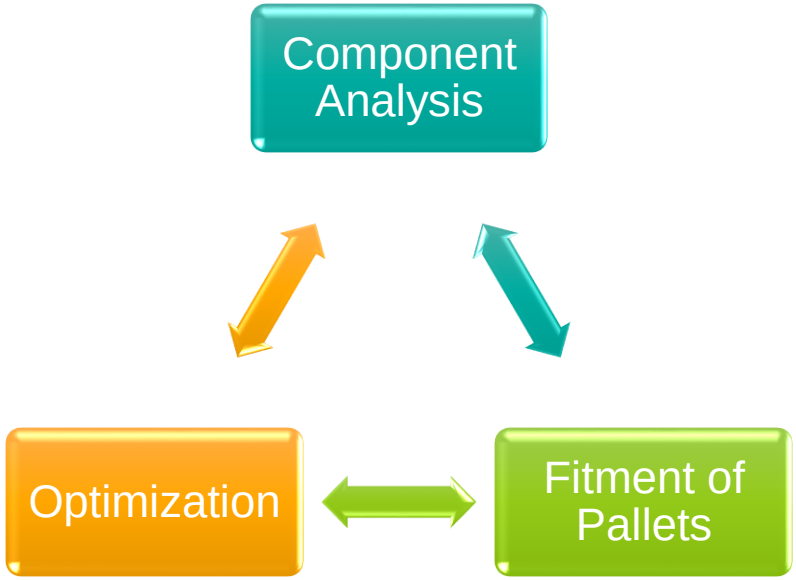

Sample EV Solutions

Optimised Pallet wise arrangement in vehicle

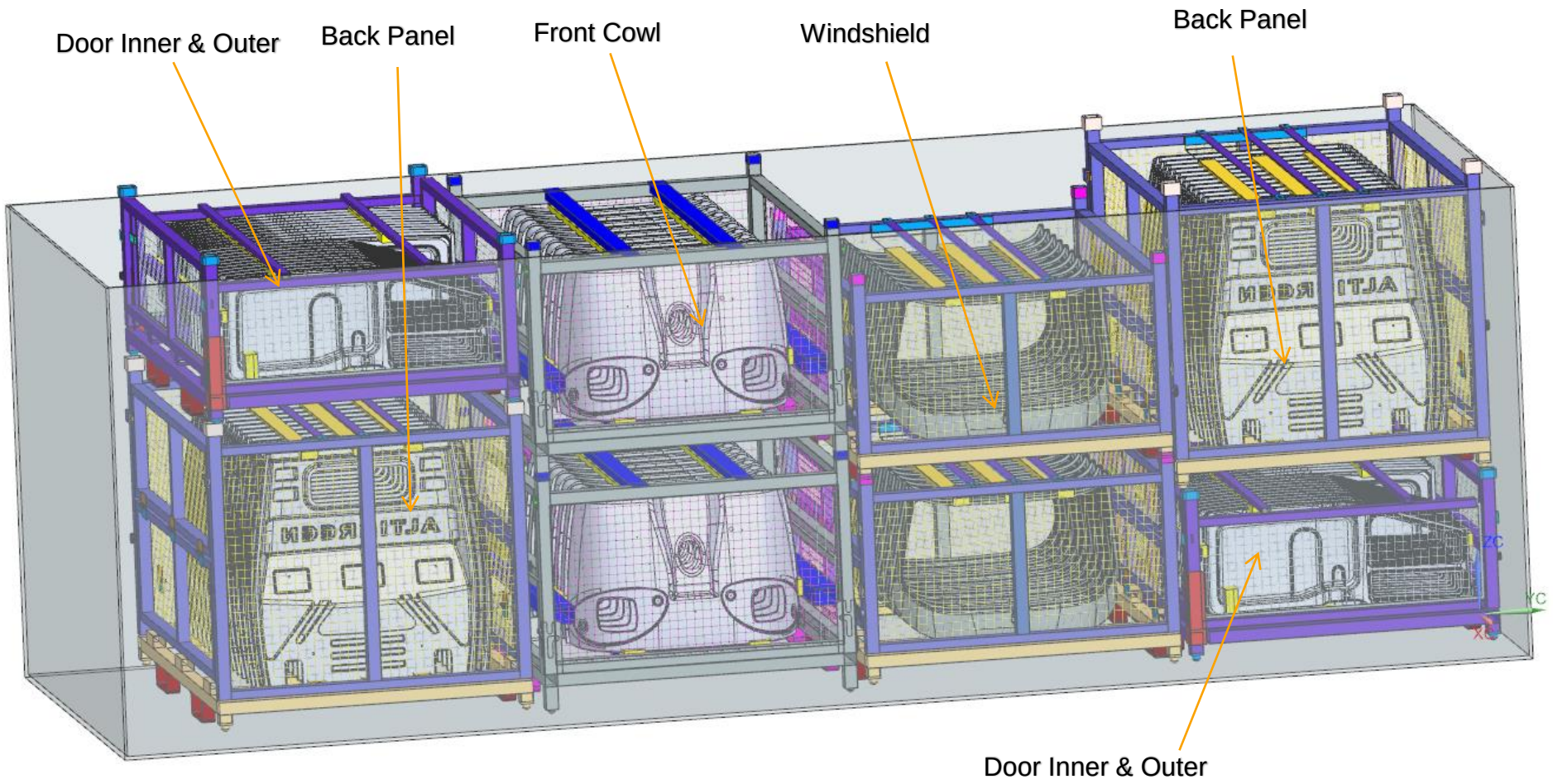

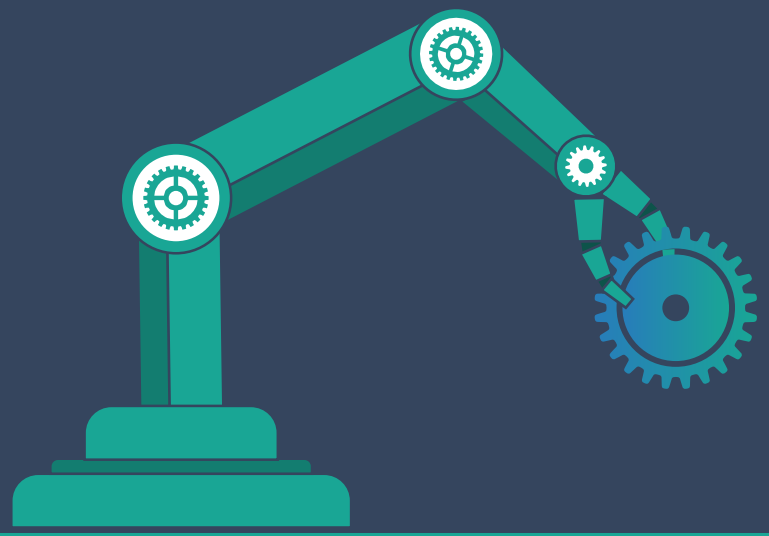

Design Capabilities

Product definition & Design process which we follow to ensure high quality standards

JYOTI
SINCE - 1987
Your Total Sheet Metal Systems Partner

Design Services

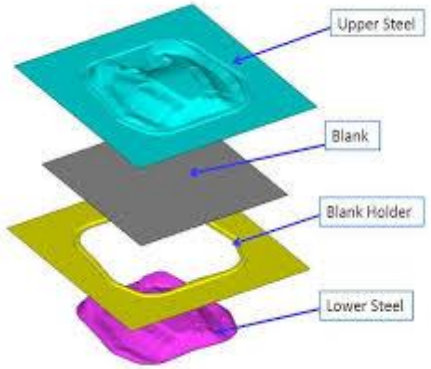

Manufacturing Optimization

Combine Operation,
Blank Optimization,
Optimum Tool Structure,
100% 3D Design

Project Development

Economical & technical viability Study ,
Analysis of technical norms & standards ,
Customer Requirements , Material
development , Software Prototyping

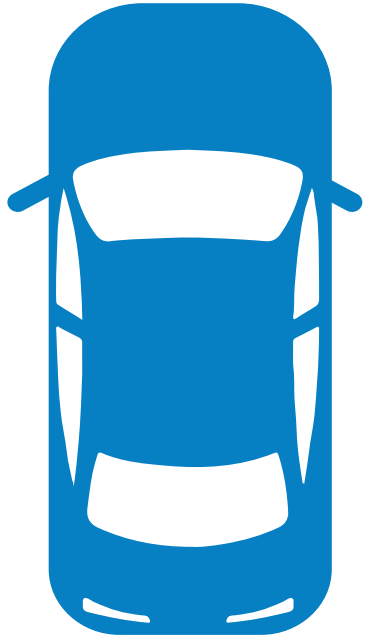

End to End Design Solution

Simulation Studies

Draw Simulation, Forming Simulation,
Spring Back Analysis, Past project
references.

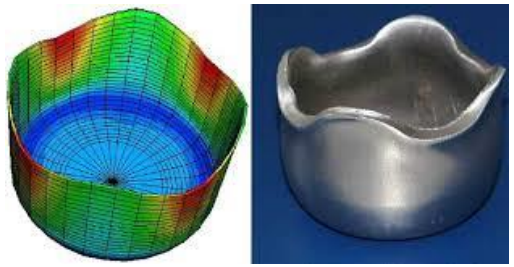

Process Development

Process Feasibility , Production
Equipment Development , Validation &
Certification , Die & Fixture Development,
Safety Engineering

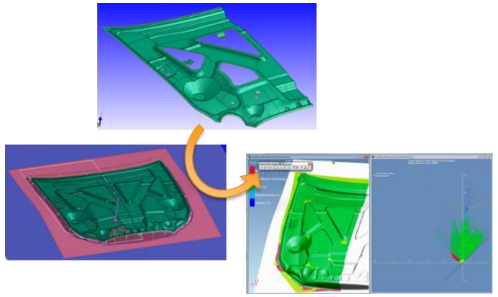

JYOTI
SINCE - 1987
Your Total Sheet Metal Systems Partner

Design Software Capabilities

			No's of Licences
Design	SIEMENS NX, CATIA, SolidWorks	For Product Design, Surface activities & Tool Design	6-Catia 6- UG-NX 2 - Solidworks
Simulation	LS Dyna, PAM-STAMP, AUTOFORM Forming Reality, Hyperform	For Simulation & Springback	1- LS Dina 1- Pam Stamp 1- Hyperform Subscription- Autoform
Engineering	AUTODESK, DraftSight, eDRAWINGS®	For 2-D & Engineering reviews	5- Autocad 2- DraftSight 30- EDrawing
CAM & Others	Delcam, AUTODESK POWERMILL	For CAM & Manufacturing activities	5- DelCam 6- PowerMill

JYOTI
SINCE - 1987
Your Total Sheet Metal Systems Partner

Design Team Structure

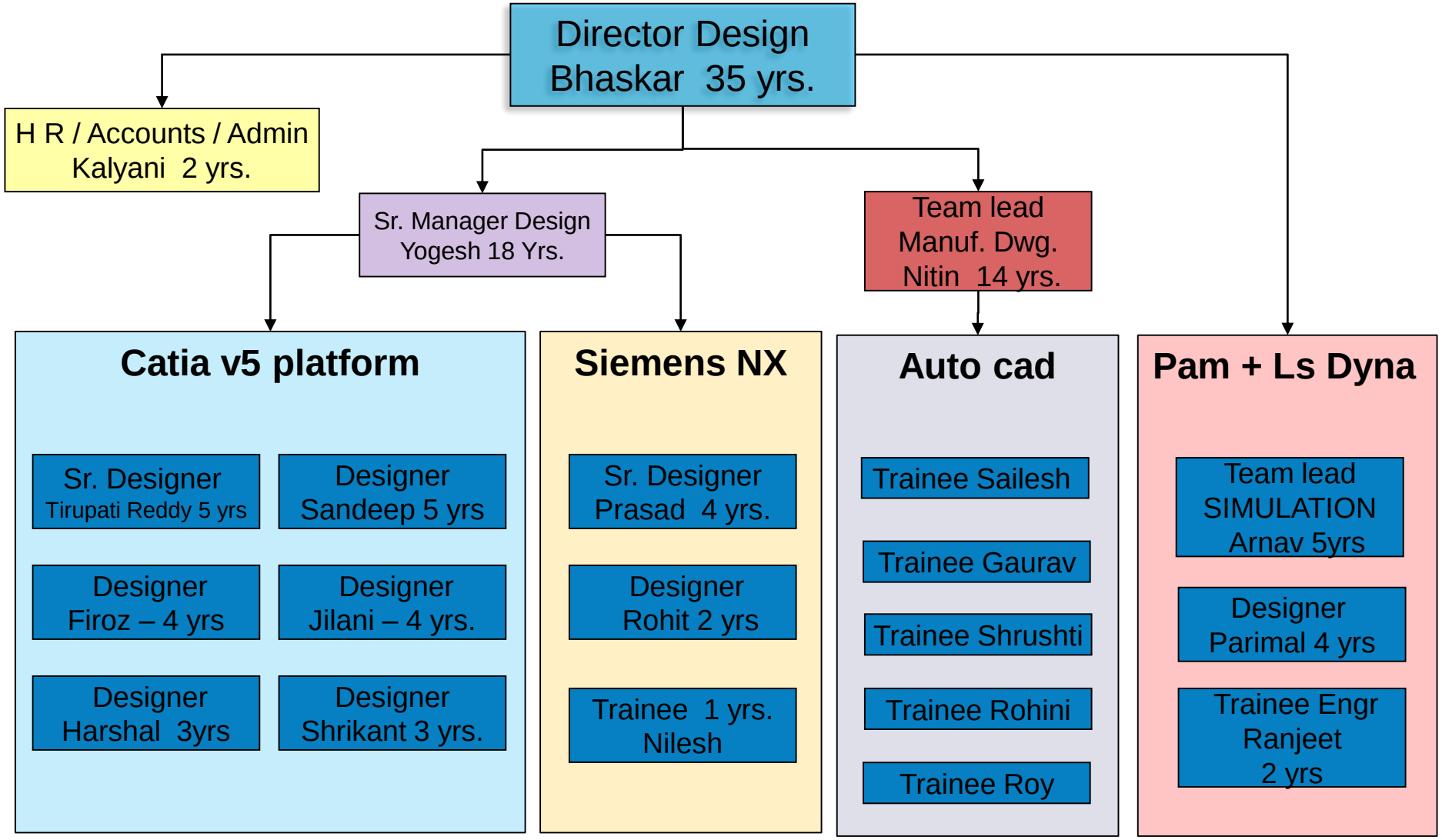

JYOTI
SINCE - 1987
Your Total Sheet Metal Systems Partner

Our Design Studio

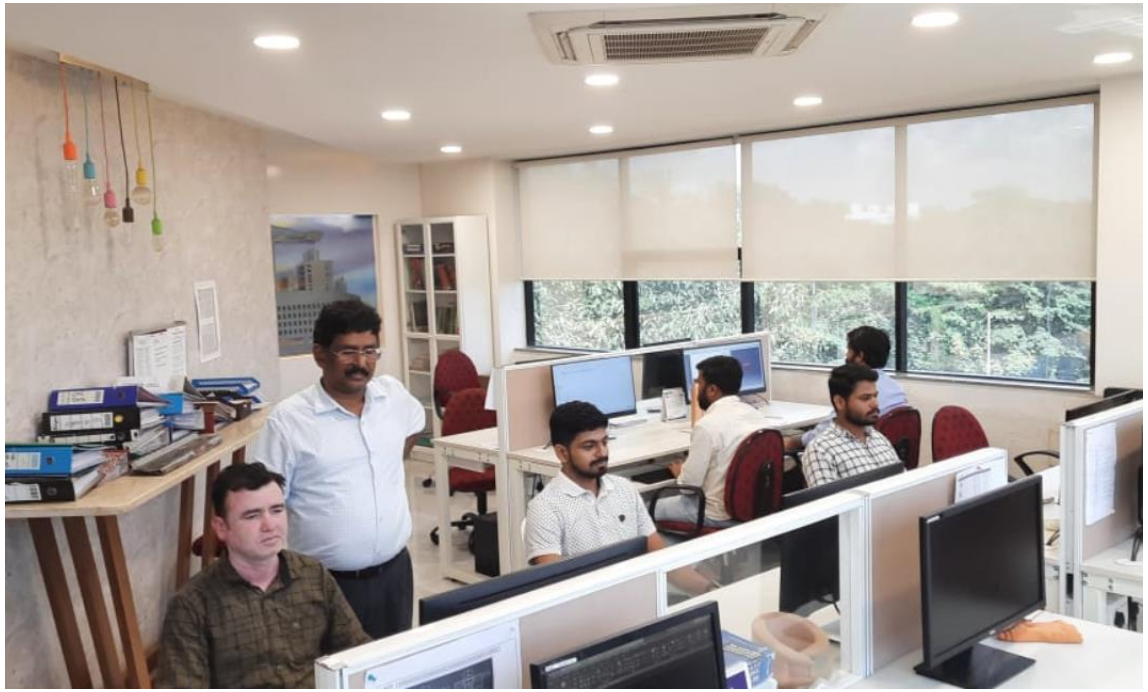

Complete Technical Design ONE-STOP Solution

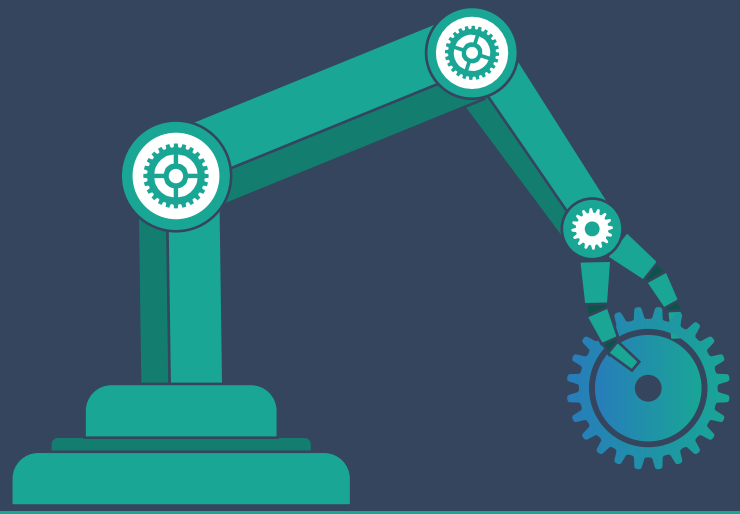

Dies & Toolings

Tool room capabilities to manufacture Dies , Jigs , Fixtures , Welding units & automations

JYOTI
SINCE - 1987
Your Total Sheet Metal Systems Partner

Capacity

Large Tools

- Size: **4000X3000**
- Yearly Capacity: **100 units**
- Cycle Time: **6 Months**

Medium Tools

- Size: **2500X1500**
- Yearly Capacity: **150 units**
- Cycle Time: **4 Months**

Small Tools

- Size: **1200X500**
- Yearly Capacity: **250 units**
- Cycle Time: **3 Months**

Company Manpower

- Workers & Operators
- Engineering & Staff
- Design
- Managers

Total	**: 380 team members**
Design	**: 28 Members**
Tool Room	**: 180 Members**
Stamping	**: 202 Members**

Revenue 2021-22 : 25 million Dollars (Jyoti Group)

JYOTI
SINCE - 1987
Your Total Sheet Metal Systems Partner

Our Manufacturing Plant -1

Moshi Plant

Heavy Die Shop – MIDC Moshi, Pune

Manufacturing from 2 meter to 4.5 meter length of dies. With a range of presses – hydraulic and **CMM** with other required equipment of international standard, the plants have complete capabilities for making complex sheet metal components assemblies of different sizes.

Capability

Capacity :
65 T of dies per Month
12 Dies / Per month

Machines :
5 CNC (from 4 Mtr. to 1.6 Mtr. In size)
All types Conventional Machines.
4 Try-out Press (1000T, 500T, 400T, 400T)
CMM M/c, Pattern Shop.

Strength :
Body Floor Parts. Dash Assay, Wheel House, Door Inner, Bonnets, Auto Tail Door, Reinforcements, Side Panels etc.

JYOTI SINCE - 1987
Your Total Sheet Metal Systems Partner

New Asset Addition

OKUMA

Double-Column Machining Center
MCR-A5CII
[For 5-Sided Applications]

Arrived in Aug-2022

Hugely expanded range for powerful 5-face machining

Element	Specifications
Control	X - 4500, Y - 2000, Z - 800, W simultaneous 4-axis, spindle control (1 axis)
Position feedback	OSP full range absolute position feedback (zero point return not required)
Coordinate functions	Machine coordinate system (1 set), work coordinate system (20 sets)
Min / Max inputs	8-digit decimal, ±99999.999 to 0.001 mm (±3937.0078 to 0.0001 in.), 0.001º Decimal: 1 µm, 10 µm, 1 mm (0.0001,1 in.) (1˚, 0.01º, 0.001º)
Feed	Override: 0 to 200%, rapid traverse override: 0% to 100%
Spindle control	Direct spindle speed commands, override 30 to 300%, multi-point indexing
Tool compensation	No. of registered tools: Max 999 sets, tool length/radius compensation: 3 sets per tool
Self-diagnostics	Automatic diagnostics and display of program, operation, machine, and NC system problems

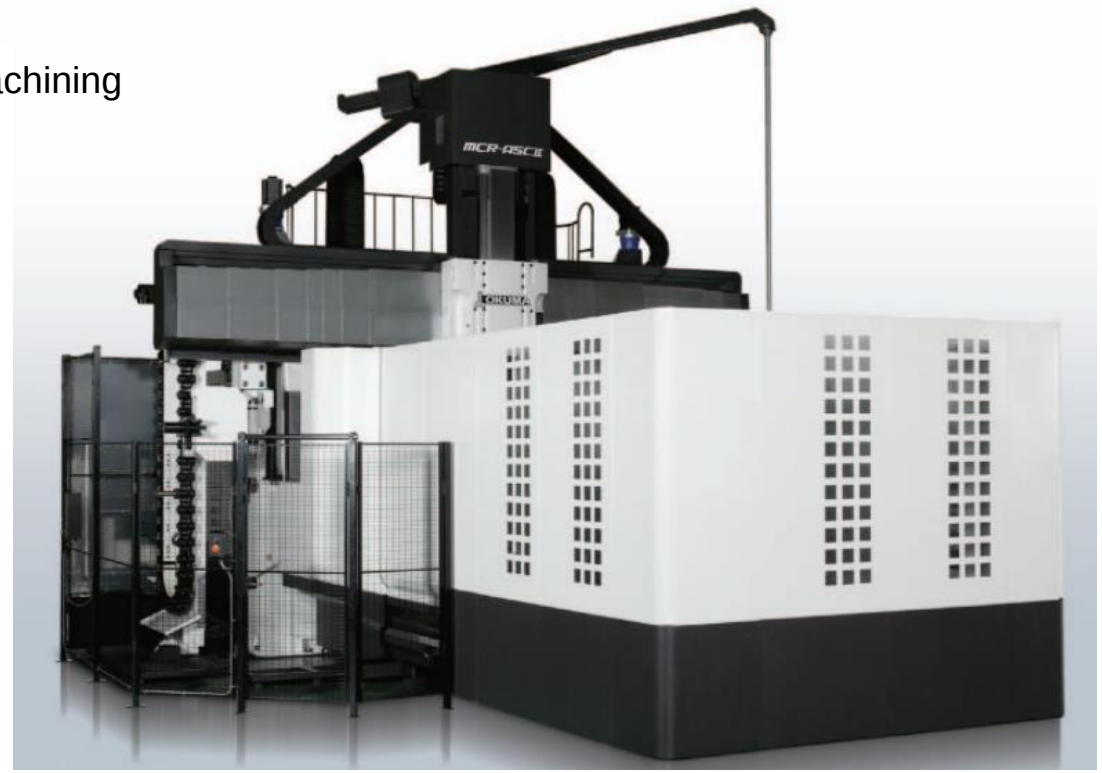

JYOTI
SINCE - 1987
Your Total Sheet Metal Systems Partner

Our Manufacturing Plant -2

Medium Die Shop – MIDC Bhosari, Pune

Manufacturing from 1 meter. to 2 meter length of dies & has extensive manufacturing capability to meet the demands of a large segment of the automotive industry..

Corporate Office

Capability

Capacity :
35 T of dies per Month
10 Dies / Per month.

Machines :
3 CNC (from 3 Mtr. to 1 Mtr. In size)
All types Conventional Machines.
3 Try-out Spotting Press (500T,250T,200T)

Strength :
Body Fuel Tank Die for Motorcycle.
Side Panel & Fender Dies for Scooter.
High Tensile Steel parts Dies.

What Jyoti Can offer

Regular Development process

This is follow finalized in the sequential order, and so project development team only moves to next phase of development or testing if the previous step completed successfully.

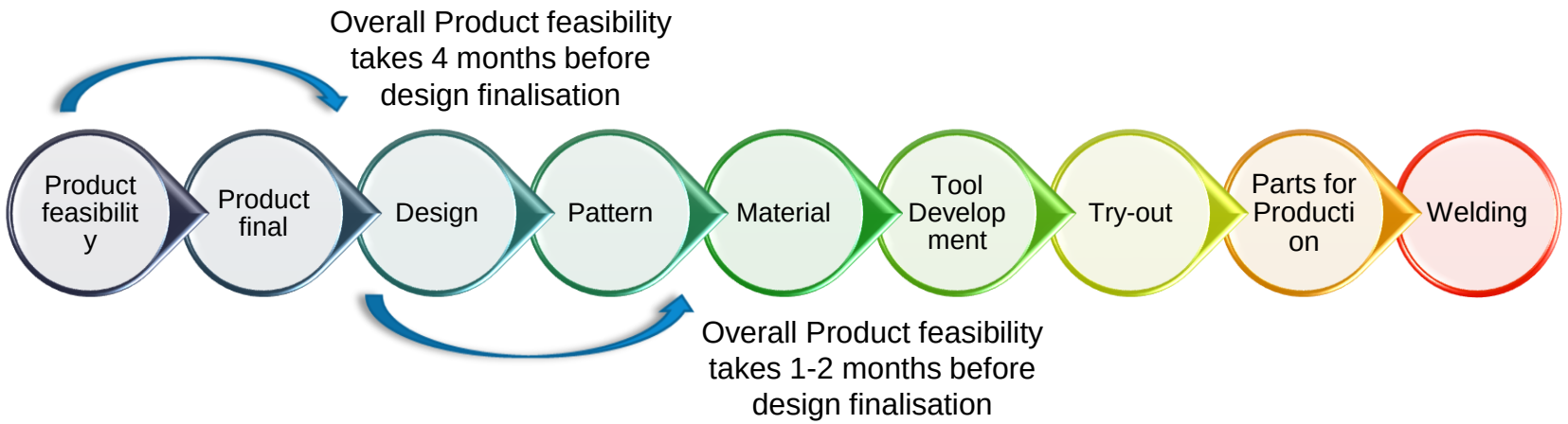

Jyoti's Development process

At Jyoti we follow the practice that helps continuous iteration of development and parallel processing for multiple activities. It is focused client process. So, it makes sure that the client is continuously involved during every stage. This saves a lot of development time.
This gives almost 20% minimum cost advantage to the customer while we take end to end ownership of the project

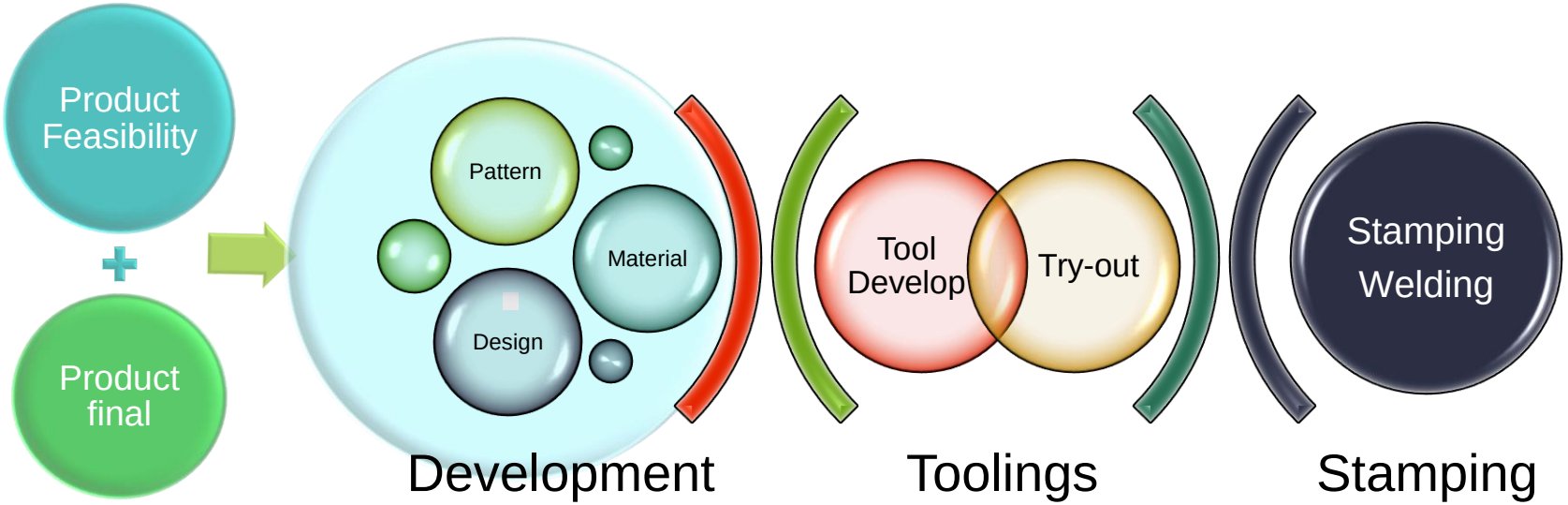

JYOTI
SINCE - 1987
Your Total Sheet Metal Systems Partner

Sample Tooling Products

TOOLINGS PRODUCTS

Car body parts Tooling's

Scooter body parts Tooling's

Motorcycle body parts Tooling's

High tensile steel part Tooling's

Off Roader body part Tooling's

Three Wheeler part Tooling's

Truck body parts Tooling's

FRONT FLOOR
MARUTI
Transfer Die – t 0.9 mm

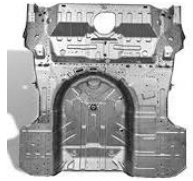

RR FLOOR RR & FR FLOOR
MARUTI
Transfer Die – (2 Out)

Door Inner L/R
TATA
Tandem Die – t 0.8 mm

Panel Rear
HONDA
Transfer Die – t 0.6 mm

Bumper
VW
Tandem Die – t 1.0 mm.

Mbr. RR Seat Cross
RENAULT
Transfer Die – t 1.2 mm

Dash Lower
GM
Tandem Die – t 7.0 mm.

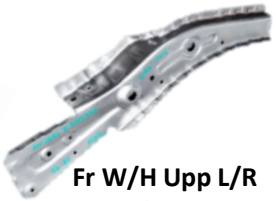

Fr W/H Upp L/R
HONDA
Transfer Die – 590 S.S.

Wheel House L/R
HONDA
Tandem Die – t 0.7 mm

Tandem & Transfer Tooling's for high volume production. All Floor Dies made for Maruti, Wheel Houses L/R made for Honda, M&M, Dash Panel dies made for GM.

JYOTI
SINCE - 1987
Your Total Sheet Metal Systems Partner

Sample Tooling Products

TOOLINGS PRODUCTS

Car body parts Tooling's

Scooter body parts Tooling's

Motorcycle body parts Tooling's

High tensile steel part Tooling's

Off Roader body part Tooling's

Three Wheeler part Tooling's

Truck body parts Tooling's

Fr, Fender

Bottom Panel

L/R Side Panel

Top Panel

JYOTI
SINCE - 1987
Your Total Sheet Metal Systems Partner

Sample Tooling Products

TOOLINGS PRODUCTS

Car body parts Tooling's

Scooter body parts Tooling's

Motorcycle body parts Tooling's

High tensile steel part Tooling's

Off Roader body part Tooling's

Three Wheeler part Tooling's

Truck body parts Tooling's

Chain Case

Body, Fuel Tank

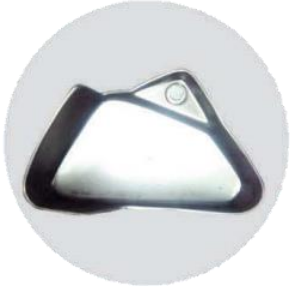

L/R Side Panel

Silencer Guard

Tandem & Transfer Tooling's for high volume production.
Fuel Tank 10 Set of Dies made successfully

JYOTI
SINCE - 1987
Your Total Sheet Metal Systems Partner

Sample Tooling Products

TOOLINGS PRODUCTS

Car body parts Tooling's

Scooter body parts Tooling's

Motorcycle body parts Tooling's

High tensile steel part Tooling's

Off Roader body part Tooling's

Three Wheeler part Tooling's

Truck body parts Tooling's

Tandem & Transfer Tooling's for high volume production.
Max. 980 Tensile steel dies made

JYOTI
SINCE - 1987
Your Total Sheet Metal Systems Partner

Sample Tooling Products

TOOLINGS PRODUCTS

Car body parts Tooling's

Scooter body parts Tooling's

Motorcycle body parts Tooling's

High tensile steel part Tooling's

Off Roader body part Tooling's

Three Wheeler part Tooling's

Truck body parts Tooling's

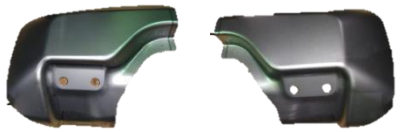

Tractor Body Bonnet, Side Panel Die.

JYOTI
SINCE - 1987
Your Total Sheet Metal Systems Partner

Sample Tooling Products

TOOLINGS PRODUCTS

Car body parts Tooling's

Scooter body parts Tooling's

Motorcycle body parts Tooling's

High tensile steel part Tooling's

Tractor body part Tooling's

Three Wheeler part Tooling's

Truck body parts Tooling's

JYOTI
SINCE - 1987
Your Total Sheet Metal Systems Partner

Sample Tooling Products

TOOLINGS PRODUCTS

Car body parts Tooling's

Scooter body parts Tooling's

Motorcycle body parts Tooling's

High tensile steel part Tooling's

Tractor body part Tooling's

Three Wheeler part Tooling's

Truck body parts Tooling's

CABIN PART`S

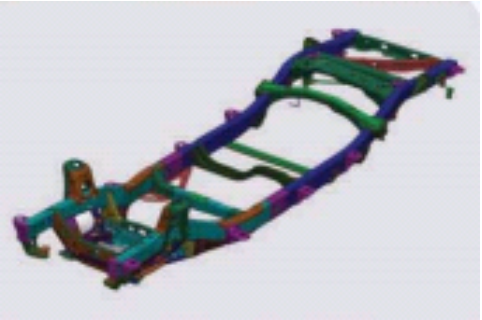

CHASSIS PARTS

3 Piece Bumper

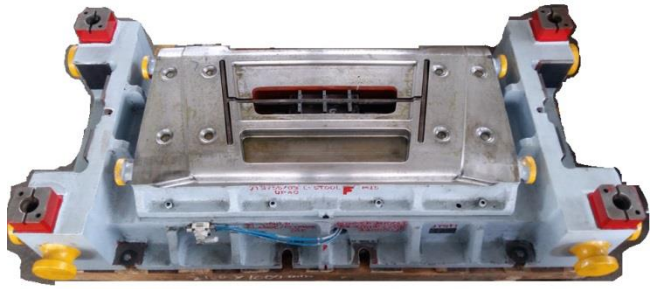

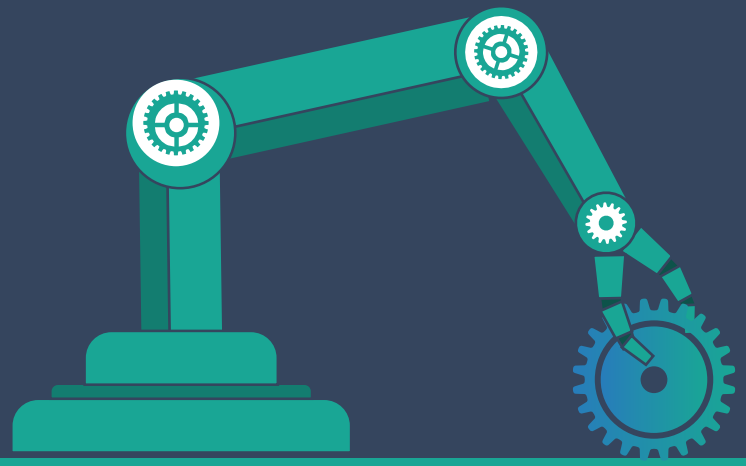

Stamping

Making & delivering high Quality Stamping Child parts, welding assemblies etc.

JYOTI
SINCE - 1987
Your Total Sheet Metal Systems Partner

Our Stamping Plant -3

Press Shop – MIDC Markal, Pune

Capacity up to 1000T press for Heavy Stamping with welding assembly capability. A facility designed and maintained to deliver quality products

Markal Unit

Capability

Machine List :
1000T-600T-500T Mech. Press Line - 1
800T-500T-500T Mech. Press Line - 2
Welding Line

Products :
Cross Beam Assay, CM Rack & Pinion Assay, AC Mounting Bracket Assay, Shock Absorber & Cab Mtg, Y1 Truck Assay.

Customer :
Daimler, Tata Motors, JBM Group, Mungi, Takshi

JYOTI SINCE - 1987
Your Total Sheet Metal Systems Partner

Our Stamping Plant -4

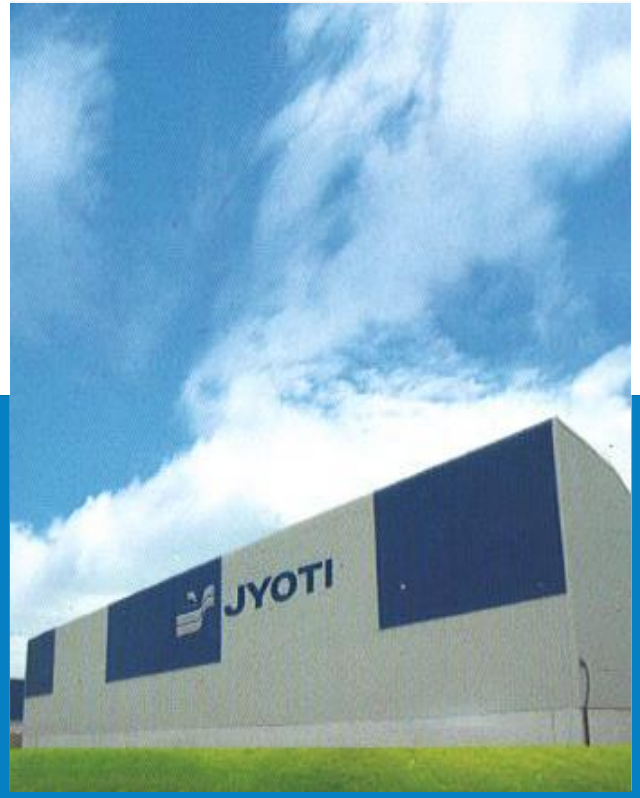

Chennai Unit

Press Shop – Sriperumbudur, Chennai

Capacity up to 600T press for Medium Stamping with welding assembly capability. We are constantly upgrading our equipment to meet the current demands of the stamping industry as well as continually training our employees and machine operators in the latest manufacturing technologies.

Capability

Machine List :
1000T Mech- 1 Nos
600T Hyd. – 2 Nos.
500T-500T-500T-400T Mech. Press Line
500T-250T-100T-100T Mech. Press Line
Welding Line

Products :
2 Wheeler Fuel Tank, Cross Car Beam Assay, Doors

Customer :
Royal Enfield, TVS , Motherson, Daimler, Automotive Axle Ltd

JYOTI
SINCE - 1987
Your Total Sheet Metal Systems Partner

Our Fabraction Plant -5

Heavy Fabrication Shop – Maval , Pune

Our Service Centre is an intermediary between Steel Producers and the end-users. It is one of the main link in the steel supply chain. We endeavor to supply steel in exact quantity, in customized form and in exact time that customers require. This makes the steel immediately usable by the customer which greatly reduces wastage, consumer time and inventory carrying cost.

Capability

Machine List :

Cut to Length,Cut to Size,Re-Shearing machine, Plasma Machine,OxyFuel Machine ,Press Break Machine-6mtr , Weigh Bridge, Gas Cutting Machine, Rolling Machine , Hydraulic Press Break Machine

Products :

Profile Precision Cut Parts , CTL , CTS , PEB , Assemblies & Custom Fabraction

Customer :

Shakti, Caterpillar, Indian Railways, BEML, Terrex, L&T, Indus RockTool, Electromech etc.

Maval Unit

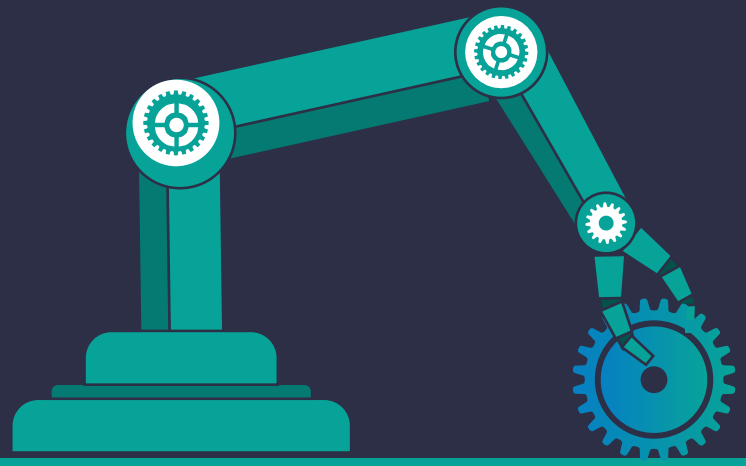

Tool Making @ Jyoti

Making & delivering high Quality Tools for Robust Products

JYOTI
SINCE - 1987
Your Total Sheet Metal Systems Partner

Simulation

Case study : Simulation Process Plan

SIDE PANEL

Customer: TVS

PROJECT : SIDE PANEL

Parameter	Value
Material	BHS220
Thickness (in mm)	0.8 mm
UTS	331 MPa
Yield strength (MPa)	208 MPa
'r' bar r0 / r45 / r90 (min value)	1.8
'k' value (MPa)	575.5
'n' value (min value)	0.22
Coefficient of friction	0.125

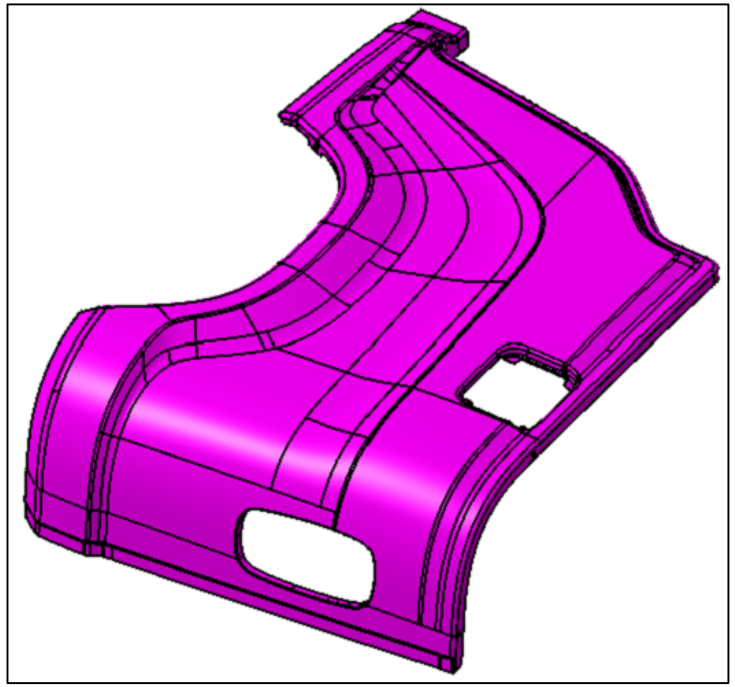

OP.NO.	DESCRIPTION
OP-10	DRAW
OP-20	TRIM & C-TRIM, PIE
OP-30	TRIM, FL. DOWN & C- FLANGE
OP-40	FL. DOWN, PIE, C-BEND,RST.

DATA RECIVED ON :- 03.11.2022 (REV04)

G4224889.stp	02-11-2022 03:03 PM	STP File	12,459 KB
G4224899.stp	02-11-2022 03:03 PM	STP File	10,762 KB

Simulation Design

Simulation services at customer's end

Output / Deliverables of Feasibility Study

- Macro Level Forming Simulation Report (Thinning & Fld)
- Sheet Metal Stamping Process Details (Draw/ Trim /Flange/Cam Cut Etc.)
- Force Required For Each Operation Hence Press Capacity
- Blank Size / Input Raw Material Size (Part Cost Can Be Estimated)
- Suggestions For Weight Reduction (Thickness Change)
- Suggestions For Material Cost Reduction (Edd To DD)
- Combining Of 2 Parts To Reduce Handling Cost

JYOTI SINCE - 1987

Your Total Sheet Metal Systems Partner

Tool Process

Case study : Complete Program

Case study : Quotation / Method Plan & Tool Sizes

Type	Child Part No.	Part Name	Qty. /Assy	RM Grade	Part Size L mm x W mm x T mm			T mm	Approx Blank Size L mm x W mm		Pcs/ Blank	O/p Wt. /Assy (Kg)	No. of Stamp Process	Type	Press Type	M/c Ton	WORK ORDERs	No. of Strokes	OP NO	Operation	DIE SIZE (L mm x W mm x SH mm)			TOOL WEIGHT (KG)
1	546563208227	REINFORCEMENT,A-PILLAR,LH	1	DP780 SS4024	873	320	111	1.20	593	1,133	1	3.020	5.00	Casting	Mech	500	J27301-5850	1.00	5	BL - L/R	1700	1100	500	3680
		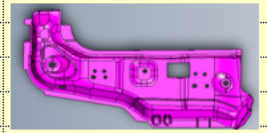												Casting	Hyd	1000	J27301-5851	1.00	10	DR	1750	1100	700	5300
														Casting	Mech	600	J27301-5852	1.00	20	TR/PIE	1550	920	700	3930
														Casting	Mech	800	J27301-5853	1.00	30	RST/C-TRM	1500	850	700	3510
														Casting	Mech	600	J27301-5854	1.00	40	PI/CPIE	1700	1280	700	5990
																	J27301-5855			CF				500
2	546563208228	REINFORCEMENT,A-PILLAR,RH	1	DP780 SS4024	873	320	111	1.20	593	1,133	1	3.020	4.00	Casting	Mech			1.00		BL - L/R				
		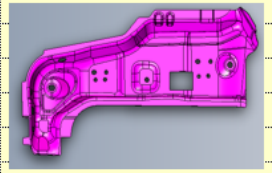												Casting	Hyd	1000	J27302-5856	1.00	10	DR	1750	1100	700	5300
														Casting	Mech	600	J27302-5857	1.00	20	TR/PIE	1550	920	700	3930
														Casting	Mech	800	J27302-5858	1.00	30	RST/C-TRM	1500	850	700	3510
														Casting	Mech	600	J27302-5859	1.00	40		1700	1280	700	5990
																	J27302-5860			CF				500
																				TOTAL >>>>>>>>>>>>>>>>>>>>>>>				42140

Once Business finalised

JYOTI
SINCE - 1987
Your Total Sheet Metal Systems Partner

Simulation

Case study : Simulation Process Plan

SIDE PANEL

COMPLETE PROCESS SIMULATION (FLD)

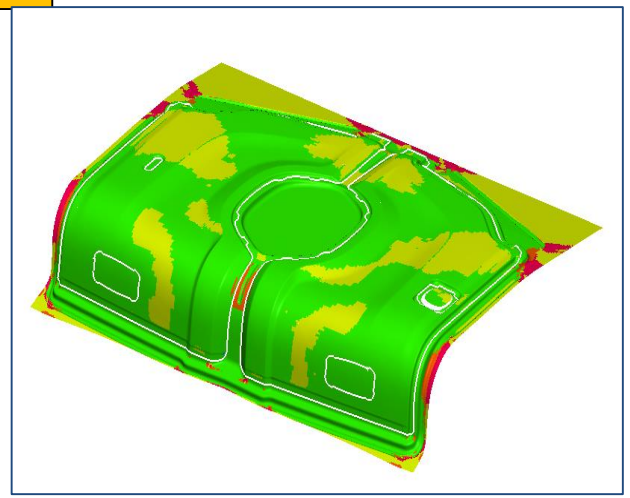

Review of customer input translated to design input

Process and Lay-out review with customer & End die design

Design check sheets a systematic approach to checking

Review with customer

Cross functional review of design cost reduction and manufacturability

THINNING

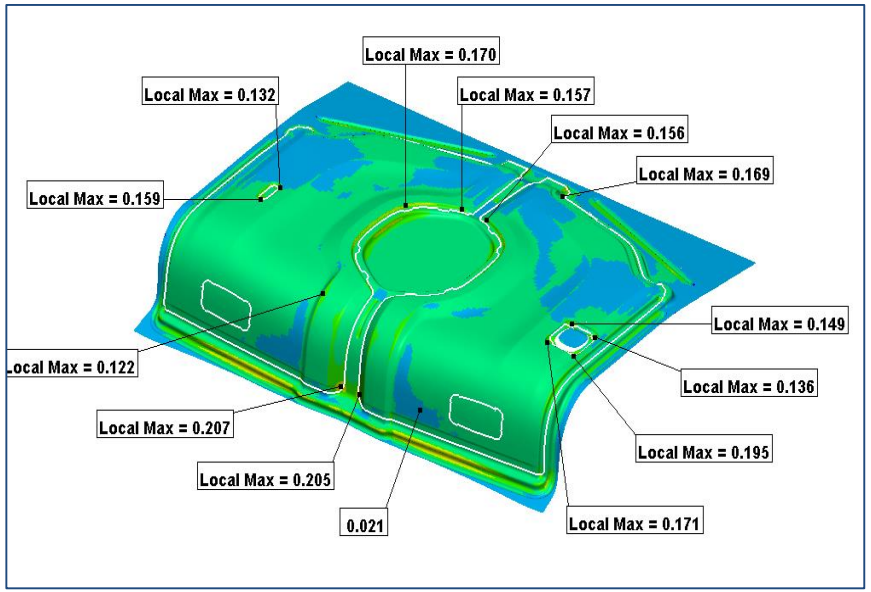

Required Force Analysis

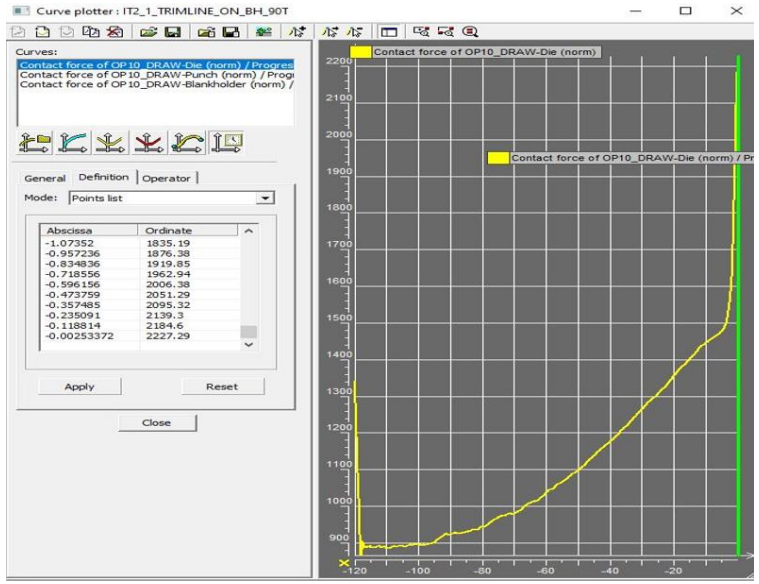

JYOTI
SINCE - 1987
Your Total Sheet Metal Systems Partner

Process Layout

Case Study :
Advantages of Simulations engineering

SIDE PANEL

METHOD PLAN

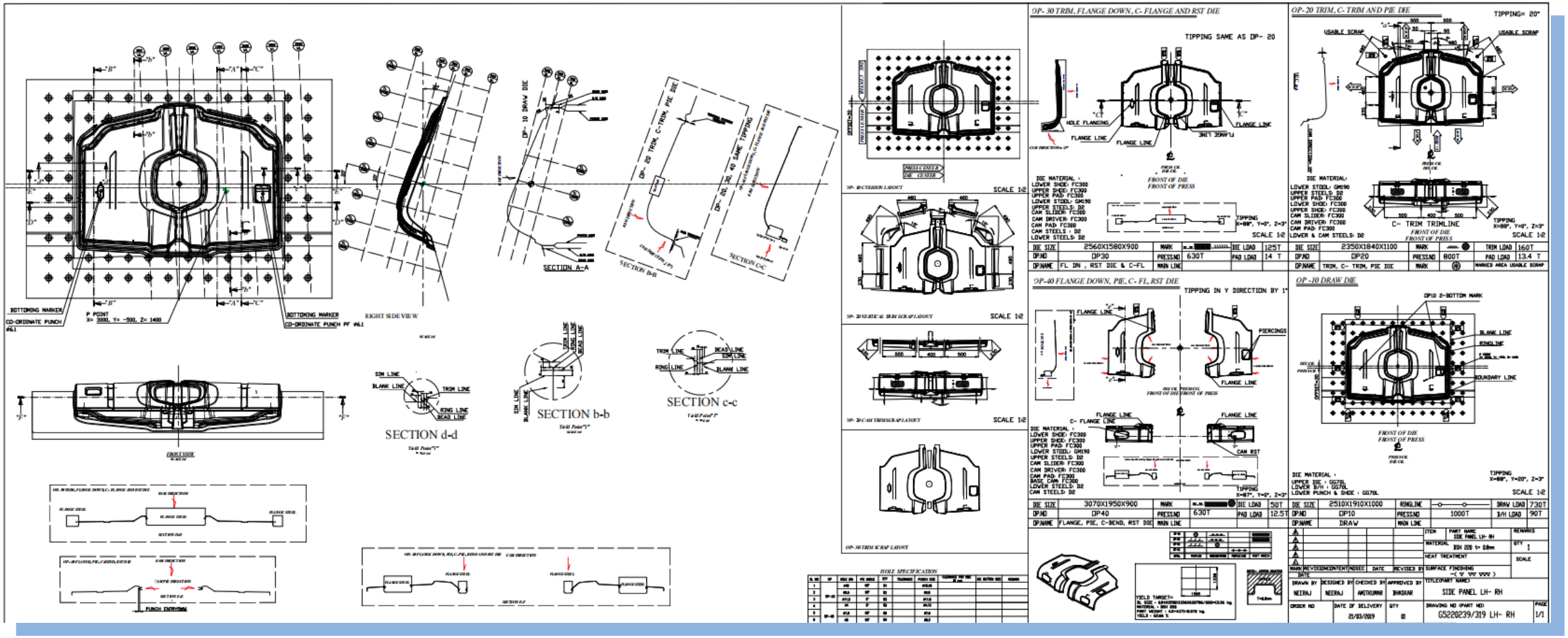

Design Essentials

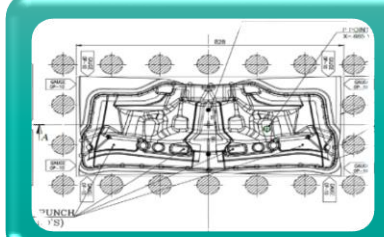

Op-10 Draw die

Following details are mentioned under Draw:
Cushion force , Press tonnage
Cushion stroke , Cushion lay-out
Press stroke , Bottoming marker position

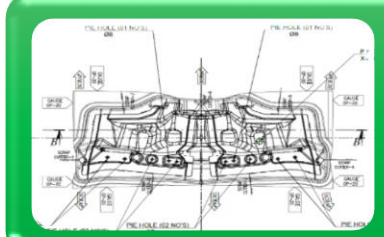

Op-20 Trim die

Following details are mentioned under Trim Die:
Cutting load hence suitable press
Stripping load & number of springs
Scrap cutter position and scrap disposal

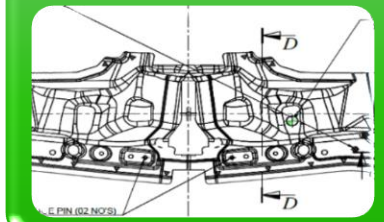

Op-30 Flange & Restrike Die

Following details are mentioned under Flange die:
Pad line & holding parameters
Component ejection force
Pad holding time / pad travel
Pad restriking area

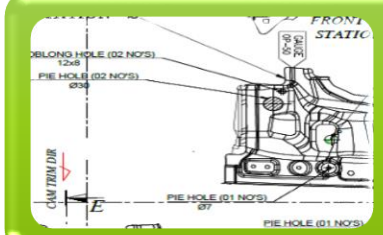

Op-40 Pierce & C-Pierce die

Following details are mentioned under Cam Pi die:
Pad line & holding force parameters
Cam direction & angles
Forces required for each piercing & also cam capacity. Std Cam details etc.

Tool Design

Advantages of Simulations engineering

DIE MATERIAL SPECIFICATION

OP NO.	PROCESS	LOWER DIE	UPPER DIE	BLANK HOLDER	PUNCH	LWR PAD	UPR PAD	LWR INSERT	UPR INSERT	LOADING	UNLOADING	REMARK
OP–10	DRAW DIE	FC300	FCD550	FCD550	FCD550	––	––	FCD550	––	MANUAL	MANUAL	
OP–20	TRIM & PIE–1 DIE	FC300	FC300	––	––	––	FC300	D2	D2	MANUAL	MANUAL	
OP–30	FL UP/DN & RST DIE	FC300	FC300	––	––	FCD550	FCD550	D2	D2	MANUAL	MANUAL	
OP–40	TRIM,C'TRIM, C,PIE DIE	FC300	FC300	––	––	––	FC300	D2	D2	MANUAL	MANUAL	
OP–50	TRIM & PIE–2 DIE	FC300	FC300	––	––	––	FC300	D2	D2	MANUAL	MANUAL	

This chant specifies various materials to be used in individual dies at the time of Method Plan preparation

PUNCH AND DIE BUTTON SIZES

SL NO	OP	HOLE DIA	PIE ANGLE	QTY	TOLERANCE	PUNCH SIZE	CLEARANCE	DIE BUTTON SIZE	REMARK
1	OP–20	ø7	0°	04	+0.2/–0	ø7.15	0.8t(5%) 0.04 / SIDE		
2		ø10	0°	04	+0.2/–0	ø10.15			
3		ø8	0°	02	+0.2/–0	ø8.15			
4	OP–40	8x8	0°	02	+0.2/–0	8.15x8.15			
5	OP–50	ø7	0°	02	+0.2/–0	ø7.15			
6		ø8	0°	02	+0.2/–0	ø8.15			
7		ø30	0°	02	+0.2/–0	ø30.15			
8		12X8	0°	02	+0.2/–0	12.15X8.15			

NOTE– HOLE TOL CONSIDERED +0.5/–0 (FINAL AFTER GD&T DATA)

Piercing Punch sizes are decided during the Method Plan stage itself and approval from the customer is taken.

JYOTI
SINCE - 1987
Your Total Sheet Metal Systems Partner

Process Simulation

Case study :
Method Plan Detailing (2-D & 3-D)

SIDE PANEL

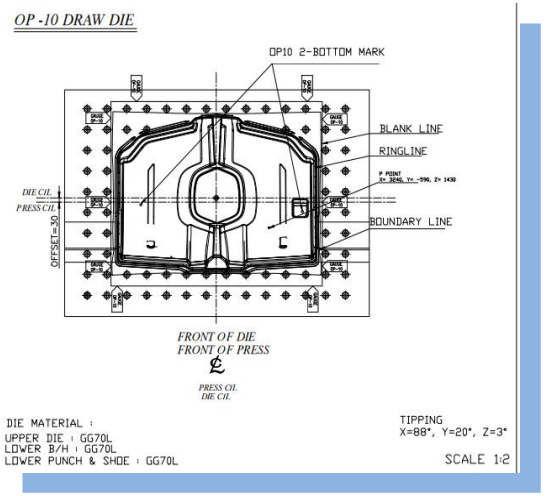

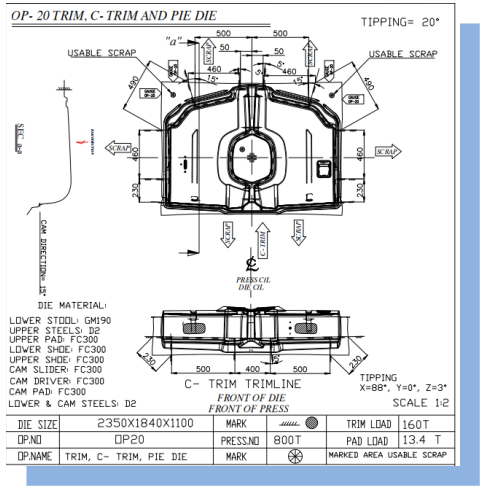

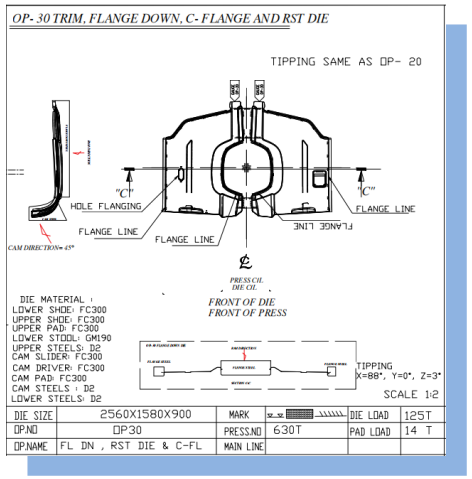

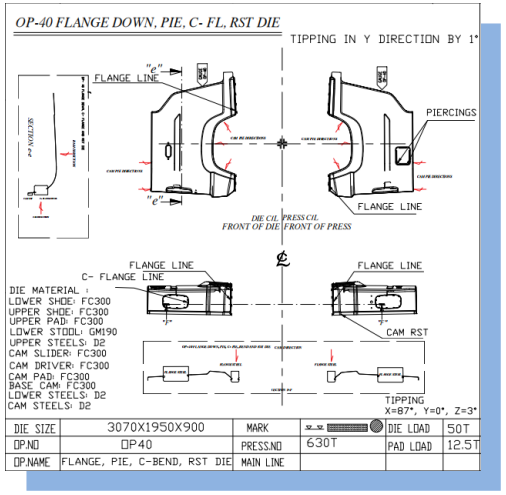

OP10- DRAW

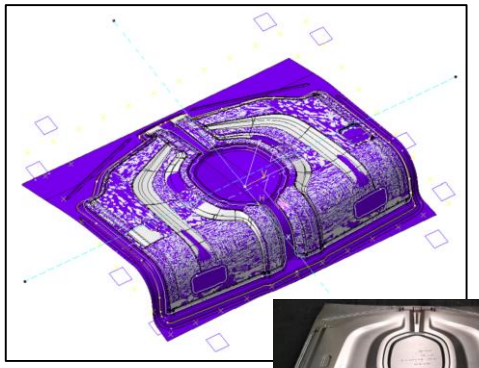

OP20_TRIM , C-TRIM & PIE

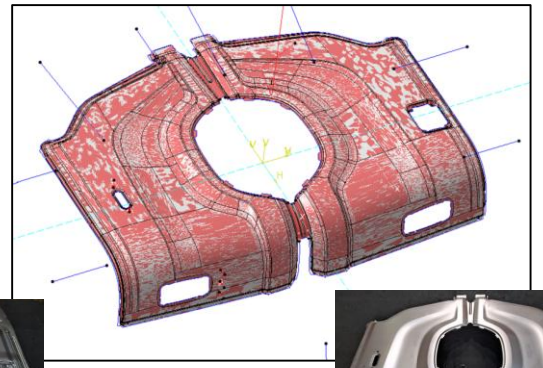

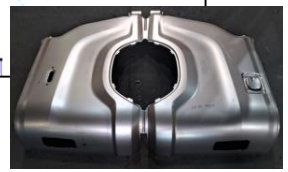

OP30_TRIM , FL DWN ,C-FLANGE & RESTRIKE

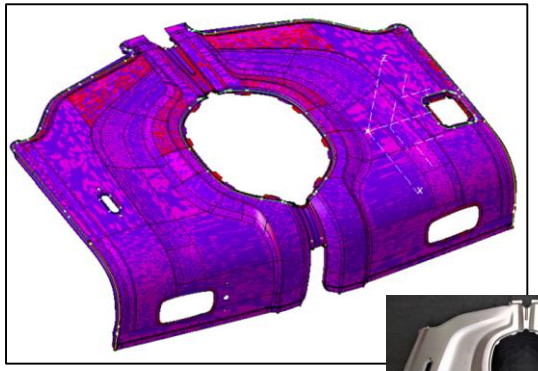

OP40- FLANGE DWN , PIE C-FLANGE & RST

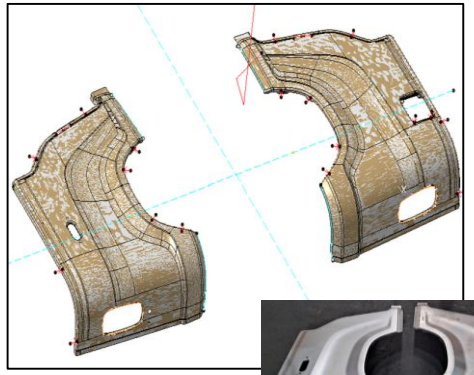

3D Method Plan

JYOTI SINCE - 1987
Your Total Sheet Metal Systems Partner

Design Recommendations

SIDE PANEL

Observations, Comments & Recommendations

S.NO	OBSERVATIONS	IMAGES	RECOMMENDATIONS
1	Compression Is Observed At Highlighted Region (Ref Slide 06)	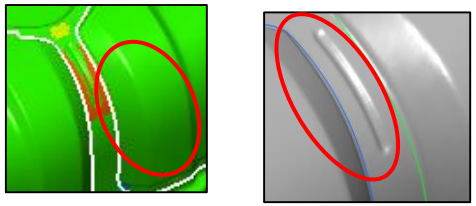	No physical wrinkles only compressiion.
2	Thinning Is 20.7% At Highlited Area. (Ref Slide 06)	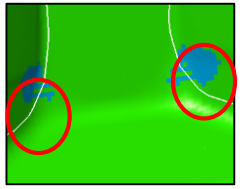	Local region only accept As it is.
3	Thinning Is 24.3% At Highlited Area. (Ref Slide 06)	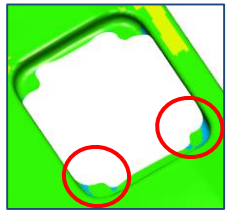	Local region only accept As it is.
4	Compression Is Observed At Highlighted Region (Ref Slide 11)	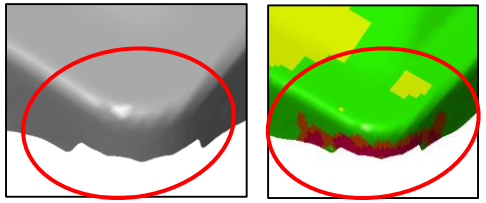	Compression is there no physical wrinkle observed. Accept as it is.

Case study :

Design Recommendation for component formability

JYOTI SINCE - 1987
Your Total Sheet Metal Systems Partner

Optimization

Case study : Design Recommendation for component formability

SIDE PANEL

Existing Project

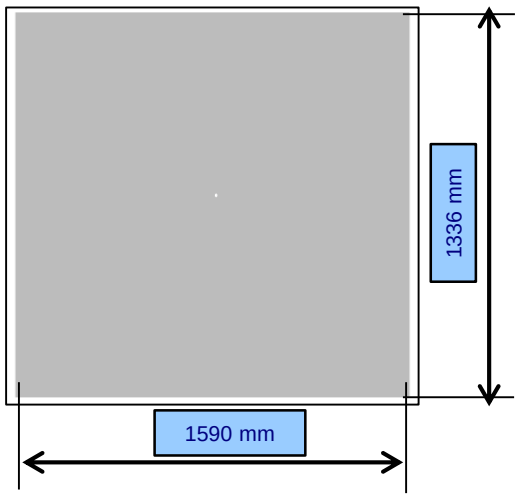

INPUT :
- BLANK SIZE-1590 X 1336 X 0.8 mm

- RUNNING BLANK SIZE-1580 X 1350 X 0.8 mm

YIELD CALCULATION:
- BLANK WT / INPUT WT -13.357 Kg
- FINISHED PART WEIGHT(2COMP)-8.372 Kg
- YIELD % - 62.67 %

New Project

ITERATION -1

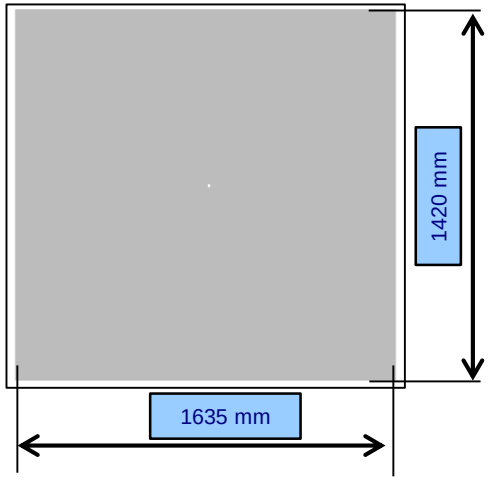

INPUT :
- BLANK SIZE-1635 X 1420 X 0.8 mm

YIELD CALCULATION:
- BLANK WT / INPUT WT -14.59 Kg
- FINISHED PART WT(2COMP)-8.454 Kg
- YIELD % - 57.95 %

ITERATION - 14 FIANL

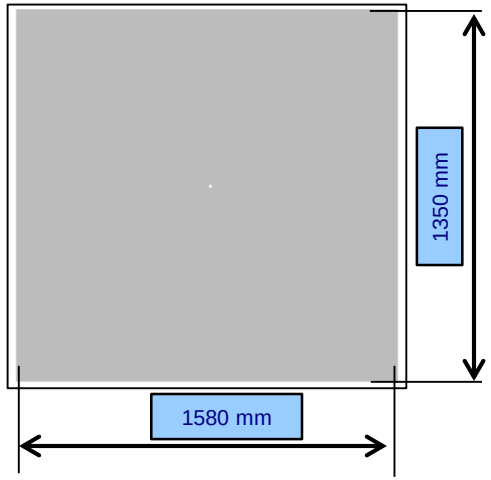

INPUT :
- BLANK SIZE-1580 X 1350 X 0.8 mm

YIELD CALCULATION:
- BLANK WT / INPUT WT -13.62 Kg
- FINISHED PART WT(2COMP)-8.495 Kg
- YIELD % - 63.34 %

BLANK SIZE MADE COMMONG WITH RUNNING BLANK SIZE

JYOTI SINCE - 1987
Your Total Sheet Metal Systems Partner

Validation

Simulation Analysis & Actual Parts

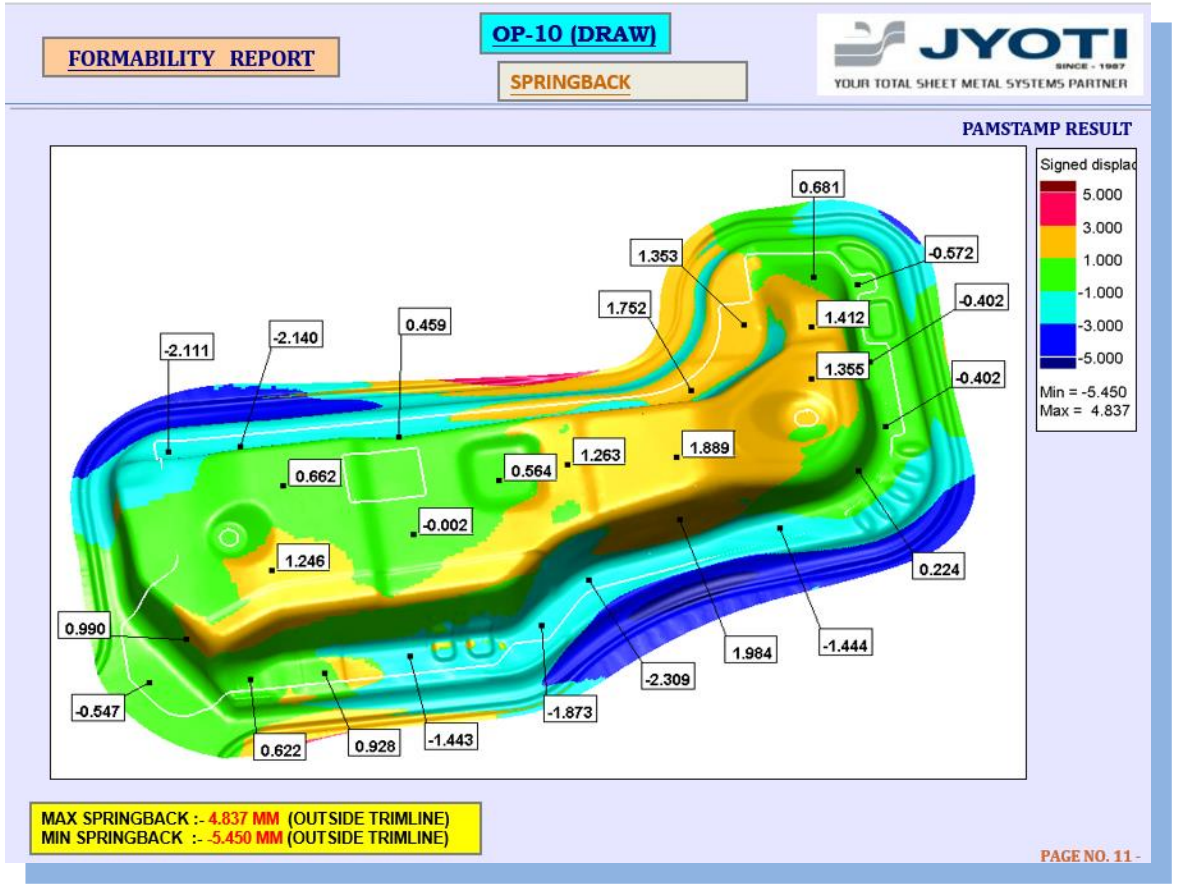

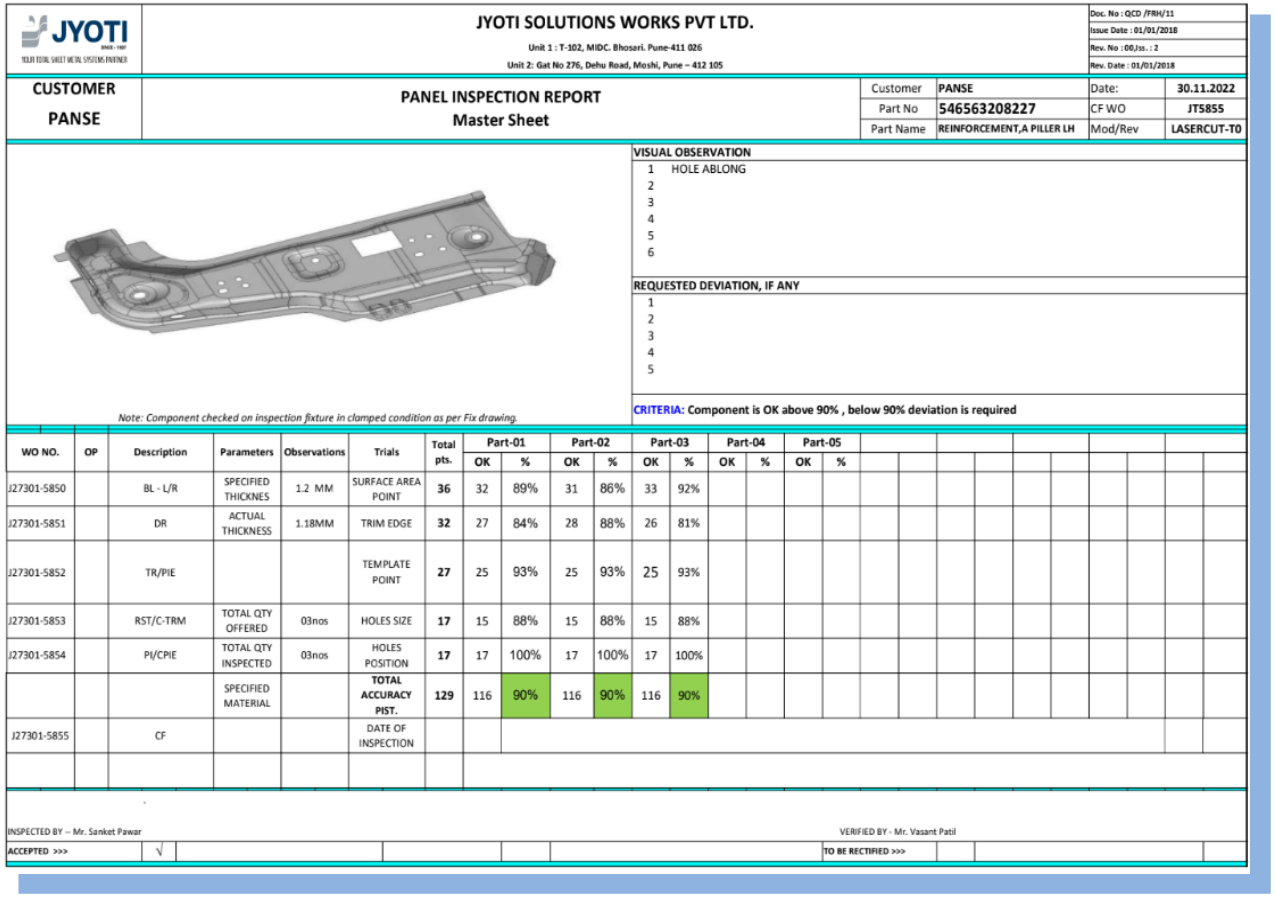

JYOTI SOLUTIONS WORKS PVT LTD.
Unit 1 : T-102, MIDC. Bhosari. Pune-411 026
Unit 2: Gat No 276, Dehu Road, Moshi, Pune – 412 105

Doc. No : QCD /FRH/11
Issue Date : 01/01/2018
Rev. No : 00,Iss. : 2
Rev. Date : 01/01/2018

CUSTOMER PANSE

PANEL INSPECTION REPORT
Master Sheet

Customer	PANSE	Date:	30.11.2022
Part No	546563208227	CF WO	JT5855
Part Name	REINFORCEMENT,A PILLER LH	Mod/Rev	LASERCUT-T0

VISUAL OBSERVATION
1 HOLE ABLONG
2
3
4
5
6

REQUESTED DEVIATION, IF ANY
1
2
3
4
5

CRITERIA: Component is OK above 90% , below 90% deviation is required

Note: Component checked on inspection fixture in clamped condition as per Fix drawing.

WO NO.	OP	Description	Parameters	Observations	Trials	Total pts.	Part-01		Part-02		Part-03		Part-04		Part-05	
							OK	%	OK	%	OK	%	OK	%	OK	%
J27301-5850		BL - L/R	SPECIFIED THICKNES	1.2 MM	SURFACE AREA POINT	36	32	89%	31	86%	33	92%				
J27301-5851		DR	ACTUAL THICKNESS	1.18MM	TRIM EDGE	32	27	84%	28	88%	26	81%				
J27301-5852		TR/PIE			TEMPLATE POINT	27	25	93%	25	93%	25	93%				
J27301-5853		RST/C-TRM	TOTAL QTY OFFERED	03nos	HOLES SIZE	17	15	88%	15	88%	15	88%				
J27301-5854		PI/CPIE	TOTAL QTY INSPECTED	03nos	HOLES POSITION	17	17	100%	17	100%	17	100%				
			SPECIFIED MATERIAL		TOTAL ACCURACY PIST.	129	116	90%	116	90%	116	90%				
J27301-5855		CF			DATE OF INSPECTION											

INSPECTED BY – Mr. Sanket Pawar
VERIFIED BY - Mr. Vasant Patil
ACCEPTED >>> √
TO BE RECTIFIED >>>

Spring-Back Analysis for
780-Mpa (High Tensile) component

First Trial Done & Part Accuracy
achieved 90% with respect to model

JYOTI SINCE - 1987
Your Total Sheet Metal Systems Partner

Tool Room

Production tracker & update

Toolings Development Schedule (Micro Level)

Project - U123

Date : -01-Jan-2021

E Feasibility | DA Design Approval | C Casting/Malt | F Fitting | A Assay | T1 T1 Trial | H Hardning | C Correction
D Design | P Pattern | 2D 2D CNC | 3D 3D Design | T0 T0 Trial/Spotting | T3 T3 Trial | RM Trial RM from C | B/O Buy-Off 1

Sr. No	Part Name / NO	OP NO	Process	L mm	W mm	H mm	Wt Kg	MFG Location	Support	45	46	47	48	49	50	51	52	53	54	55	56	57	58	59	60
									Month	NOV				DEC				JAN				FEB			
									Week	45	46	47	48	49	50	51	52	53	54	55	56	57	58	59	60
									Date	02-Nov	09-Nov	16-Nov	23-Nov	30-Nov	07-Dec	14-Dec	21-Dec	28-Dec	04-Jan	11-Jan	18-Jan	25-Jan	01-Feb	08-Feb	15-Feb
									Date	08-Nov	15-Nov	22-Nov	29-Nov	06-Dec	13-Dec	20-Dec	27-Dec	03-Jan	10-Jan	17-Jan	24-Jan	31-Jan	07-Feb	14-Feb	21-Feb
									Support						¶ Trial Raw material									Buy-off	
1	Frame Tail Door G4220539 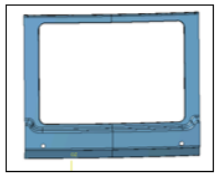	10	Draw Die (Combine)	1500	1350	600	4800	J003	J23801-4935	D	D	P		C	C	C	2D	2D	F	3D	3D	A	A	A	A
		20	Trim & Pie Die (Combine)	1500	1250	600	4400	J003	J23801-4936	D	D	P		C	C	C	2D	2D	2D	2D	2D	2D	2D	F	F
		30	Flange, Rest & Flunge Die (Oute	1400	1200	600	4000	J003	J23801-4937	D	D	P		C	C	C	2D	2D	2D	2D	2D	2D	F	F	F
		40	Pierce, C'Pie Die (Outer Only)	1400	1350	400	3000	J003	J23801-4938	D	D	P		C	C	C	2D	2D	2D	2D	F	F	F	F	F
		CF	Check Fixture				0	J003	J23801-4939	D	D	D		C	C	C	2D	2D	2D	F	F	F	3D	3D	3D
2	Skin Tail Door G4220289 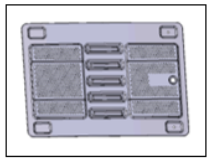	10	Draw Die (Combine)				0																		
		20	Trim & Pie Die (Combine)				0																		
		30	Louveing, Flange Down Die (Tail	1150	900	400	1600	J003	J23802-4940	D	D	P		C	C	C	2D	2D	2D	2D	2D	2D	2D	2D	F
		40	Piercing 1 (2 Station) (Tail Door	1750	800	340	0																		
		50	Piercing-2 (2 Station) (Tail Door	1750	800	340	0																		
			Check Fixture				0	J003	J23802-4941	D	D	D		C	C	C	2D	2D	2D	2D	2D	2D	3D	3D	3D
					W			MFG	Week	45	46	47	48	49	50	51	52	53	54	55	56	57	58	59	60

Sr. No	Part Name / NO	OP NO	53	54	55	56	57	58	59	60
1	Frame Tail Door G4220539	10	A	A	T0	T0	T0	T1	T1	H	T3		B/O
		20	F	F	3D	3D	A	H	T0	T0	T1	T1	T3		B/O
		30	F	F	F	3D	3D	A		T0	T0	T1	T3		B/O
		40	F	F	3D	3D	A	A	H	T1	T1	T3		B/O
		CF	3D	A	A	CM	CM								B/O
2	Skin Tail Door G4220289	10													
		20													
		30	F	F	3D	3D	A	A	T0	T0	H	T3	T3		B/O
		40													
		50													
			3D	A	A	CM	CM								B/O

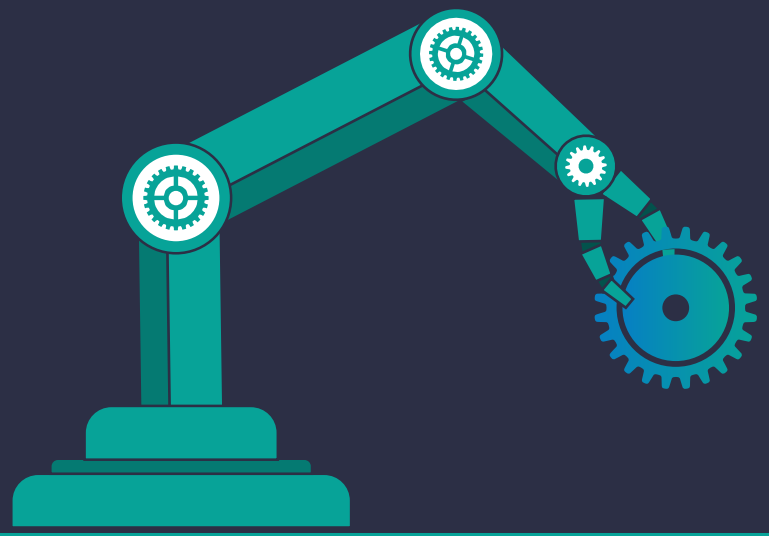

Quality Certification

Systems and Process capability

JYOTI
SINCE - 1987
Your Total Sheet Metal Systems Partner

QUALITY CERTIFICATION

Committed to the high standard of delivery

BUREAU VERITAS

ISO 9001:2008 BUREAU VERITAS CERTIFIED
Tooling Division

ISO/TS 16949:2009 BUREAU VERITAS CERTIFIED
Stamping Division

Jyoti Group promotes raising the bar by incorporating consistent change with upholding its core DNA of Integrity, Quality and Committed and inclusive working culture. The Group believes on the edifice of growth through accountability and shared prosperity.

Integrity **Quality** **Committed**

Bureau Veritas Certification

JYOTI SOLUTIONSWORKS PRIVATE LIMITED

JYOTI
SINCE - 1987
YOUR TOTAL SHEET METAL SYSTEMS PARTNER

HEAD OFFICE & UNIT – I: T 102, MIDC AREA, BHOSARI, PUNE – 411 026, MAHARASHTRA, INDIA.

This is a multi-site certificate, additional site(s) are listed on the next page(s)

Bureau Veritas Certification Holding SAS – UK Branch certifies that the Management System of the above organization has been audited and found to be in accordance with the requirements of the Management System Standard detailed below.

Standard

ISO 9001:2015

Scope of certification

DESIGN & MANUFACTURING OF PRESS TOOLS FOR SHEET METAL COMPONENTS AND CHECKING FIXTURES FOR PRESSED SHEET METAL COMPONENTS, CNC MACHINING JOB WORK FOR MOULDS, DIES AND PRESS TOOLS

Original cycle start date: 24 May 2012
Recertification cycle start date: 18 May 2021
Subject to the continued satisfactory operation of the organization's Management System, this certificate expires on: 23 May 2024
Certificate No. IND.21.6192/QM/U Version: 2 Revision date: 30 December 2021

Signed on behalf of BVCH SAS UK Branch
Jagdheesh N. MANIAN
Head – CERTIFICATION, South Asia
Commodities, Industry & Facilities Division

UKAS MANAGEMENT SYSTEMS 0008

Certification body address: 5th Floor, 66 Prescot Street, London, E1 8HG, United Kingdom.
Local office: Bureau Veritas (India) Private Limited (Certification Business), 72 Business Park, Marol Industrial Area, MIDC Cross Road "C", Andheri (East), Mumbai – 400 093, India.

Pg 1 of 2

Further clarifications regarding the scope of this certificate and the applicability of the management system requirements may be obtained by consulting the organization.
To check this certificate validity please call + 91 22 6274 2000.

BUREAU VERITAS Certification

Certificate of Approval

Awarded to

JYOTI TOOLINGS & PRESS COMPONENTS PVT. LTD.

Gat No. 213 ,At Markal, MIDC, Tal- Khed, Dist- Pune, Pune, 412 105, Maharashtra, India

Bureau Veritas Certification certify that the Quality Management System of the above organisation has been audited and found to be in accordance with the requirements of

ISO/TS16949:2009

and the applicable customer specific requirements

SCOPE
Manufacturing

PERMITTED EXCLUSION(S)
7.3 - Product design responsibility

PRODUCT(S) DELIVERED
PRESS COMPONENTS

Date of certification: 22 December 2015
Date of expiration: 14 September 2018
IATF Certificate No: 22/373
Bureau Veritas Certification Certificate No: IND-15910/TS

JYOTI
SINCE - 1987
Your Total Sheet Metal Systems Partner

A T M A N I R B H A R
A W A R D

For Indegenisation of Tools,
Stamping Parts and Assemblies

JYOTI
SINCE - 1987
Your Total Sheet Metal Systems Partner

QUALITY CERTIFICATION

Committed to the high standard of delivery

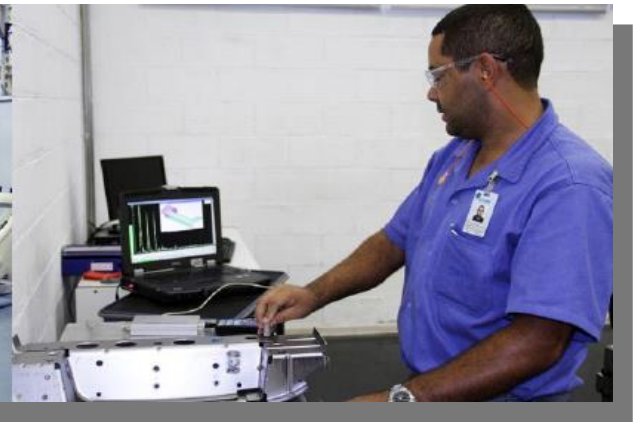

ISO 14001:2015

Certificate of Registration

This is to Certify that
Environmental Management System of

JYOTI SOLUTIONS WORKS PVT. LTD.

REGD OFFICE : T-102, MIDC, BHOSARI, PUNE - 411026, MAHARASHTRA, INDIA.
UNIT 2 : GAT NO. 276 OLD SURVEY NO 146, MOSHI, TAL - HAVELI, DIST. PUNE - 412105, MAHARASHTRA, INDIA.
UNIT 3 : GAT NO. 213/214/1,220,221, 223, 235 & 236, ALANDI DEVACHI, MARKAL, PUNE - 412105, MAHARASHTRA, INDIA.
UNIT 4 : GAT NO. 295-300, VILLAGE : DHAMNE - CHANDKHED ROAD, TALUKA - MAVAL, DIST. PUNE - 410508, MAHARASHTRA, INDIA

has been assessed and found to conform to the requirements of
ISO 14001:2015
for the following scope :

DESIGN & MANUFACTURING OF SHEET COMPONENTS, AND FABRICATED WELDED ASSEMBLIES, TOOLS, & DIES, CTL, PLASMA CUTTING, BENDING, & ROLLING.
IAF CODE : 17,17

Certificate No : 22IEJG83
Initial Registration Date : 12/05/2022 Issuance Date : 12/05/2022
Date of Expiry : 11/05/2025
1st Surve. Due : 12/04/2023 2nd Surve. Due : 12/04/2024

Director

IAS ACCREDITED Management Systems Certification Body MSCB-119

IAF MEMBER OF MULTILATERAL RECOGNITION ARRANGEMENT

AQC MIDDLE EAST LLC

ISO 45001:2018

Certificate of Registration

This is to Certify that
Occupational Health & Safety Management System of

JYOTI SOLUTIONS WORKS PVT. LTD.

REGD OFFICE : T-102, MIDC, BHOSARI, PUNE - 411026, MAHARASHTRA, INDIA.
UNIT 2 : GAT NO. 276 OLD SURVEY NO 146, MOSHI, TAL - HAVELI, DIST. PUNE - 412105, MAHARASHTRA, INDIA.
UNIT 3 : GAT NO. 213/214/1,220,221, 223, 235 & 236, ALANDI DEVACHI, MARKAL, PUNE - 412105, MAHARASHTRA, INDIA.
UNIT 4 : GAT NO. 295-300, VILLAGE : DHAMNE - CHANDKHED ROAD, TALUKA - MAVAL, DIST. PUNE - 410508, MAHARASHTRA, INDIA

has been assessed and found to conform to the requirements of
ISO 45001:2018
for the following scope :

DESIGN & MANUFACTURING OF SHEET COMPONENTS, AND FABRICATED WELDED ASSEMBLIES, TOOLS, & DIES, CTL, PLASMA CUTTING, BENDING, & ROLLING.
IAF CODE : 17,17

Certificate No : 22IOJJ75
Initial Registration Date : 12/05/2022 Issuance Date : 12/05/2022
Date of Expiry : 11/05/2025
1st Surve. Due : 12/04/2023 2nd Surve. Due : 12/04/2024

Director

IAS ACCREDITED Management Systems Certification Body MSCB-119

IAF MEMBER OF MULTILATERAL RECOGNITION ARRANGEMENT

AQC MIDDLE EAST LLC

ISO 14001:2015 AQC CERTIFIED
Enviromental Management System

ISO 45001:2018 AQC CERTIFIED
Occupitetional Health & Safty Management System

Jyoti Group seeking to use & manage its environmental responsibilities in a systematic manner that contributes to the environmental pillar of sustainability. We also ensure their current thinking and worksite safety practices maintained as per organizational compliance.

Integrity **Quality** **Committed**

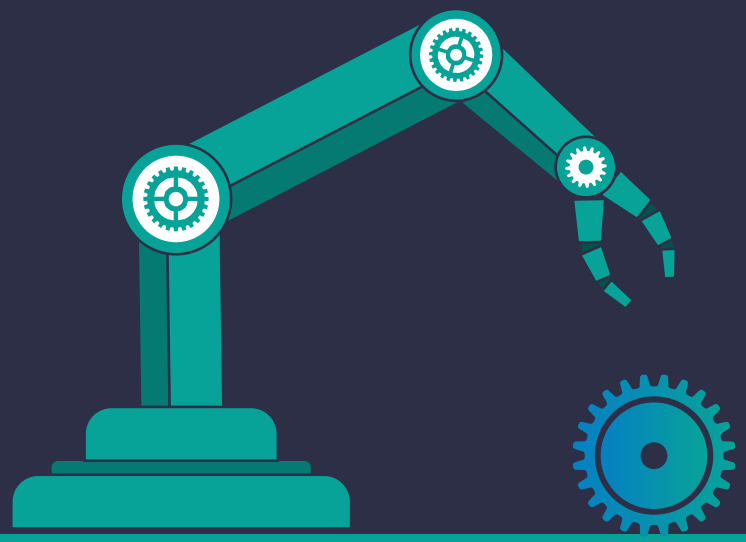

CSR & Sports Initiatives

JYOTI
SINCE - 1987
Your Total Sheet Metal Systems Partner

Caring for Health of Workforce

Jyoti Cup

(Every year)

JYOTI
SINCE - 1987
Your Total Sheet Metal Systems Partner

Caring for Health of Workforce

https://www.youtube.com/watch?v=ZZxwvVf2gyo&list=PPSV

JYOTI SINCE - 1987
Your Total Sheet Metal Systems Partner

Sample Customer Feedback

SONALIKA INTERNATIONAL

International Tractors Limited

Head Office & Plant: Village Chak Gujran, P.O. Piplanwala, Jalandhar Road, Hoshiarpur (Pb.)-146022
Phone: +91-1882-302220, 302221, Fax: +91-1882-302222
Email: sonalika@sonalika.com

Marketing Office: C-133 A, Sector-2, Noida- 201301
Phone: +91-120-4066860

To,

Dated- 12.02.2020

Jyoti Tooling & Press Components Pvt Ltd

T-102,MIDC Bhosari

Pune

Attn:-Mr. Nityanand

Sub :-Appreciation Letter

Dear Jyoti Team,

We take this opportunity to thank all Jyoti Tooling Team members for the excellent quality and services rendered to us in the new products for Fender Assembly for our prestigious Yanmar Project.

We appreciate the high level of professional approach at all stages of execution.

The die quality produces by Jyoti Tooling is in line with Japanese quality.Also,the events and the delivery schedules were in line with our requirements.

We look forward to such repeat perfomances in all our future projects and wish the entire team greater success in times to come.

With Warm regards

Yogeshwar Kumar Gautam
AVP- Projects & Material

Subhash Saini
Sr. V.P - ACG

INDIA'S 25-110 HP HEAVY DUTY TRACTOR RANGE | INDIA'S 3rd LARGEST TRACTOR COMPANY | WORLD'S PLANT WITH 2 LAKH PRODUCTION CAPACITY | PRESENCE IN OVER 100 COUNTRIES | TRUSTED BY OVER 6 LAKH CUSTOMERS

website: www.sonalika.com

Regd. Office : Pankaj Plaza - 1, Plot No. 2, Commercial Complex Karkardooma, Delhi - 110092 (India)
E-mail: sonalika@sonalika.com
(CIN-U74999DL1995PLC073245)

JYOTI

SINCE - 1987

Your Total Sheet Metal Systems Partner

Thank You

Hope can be take this relationship forward ..